G.I. MILSIM
IMPULSE50

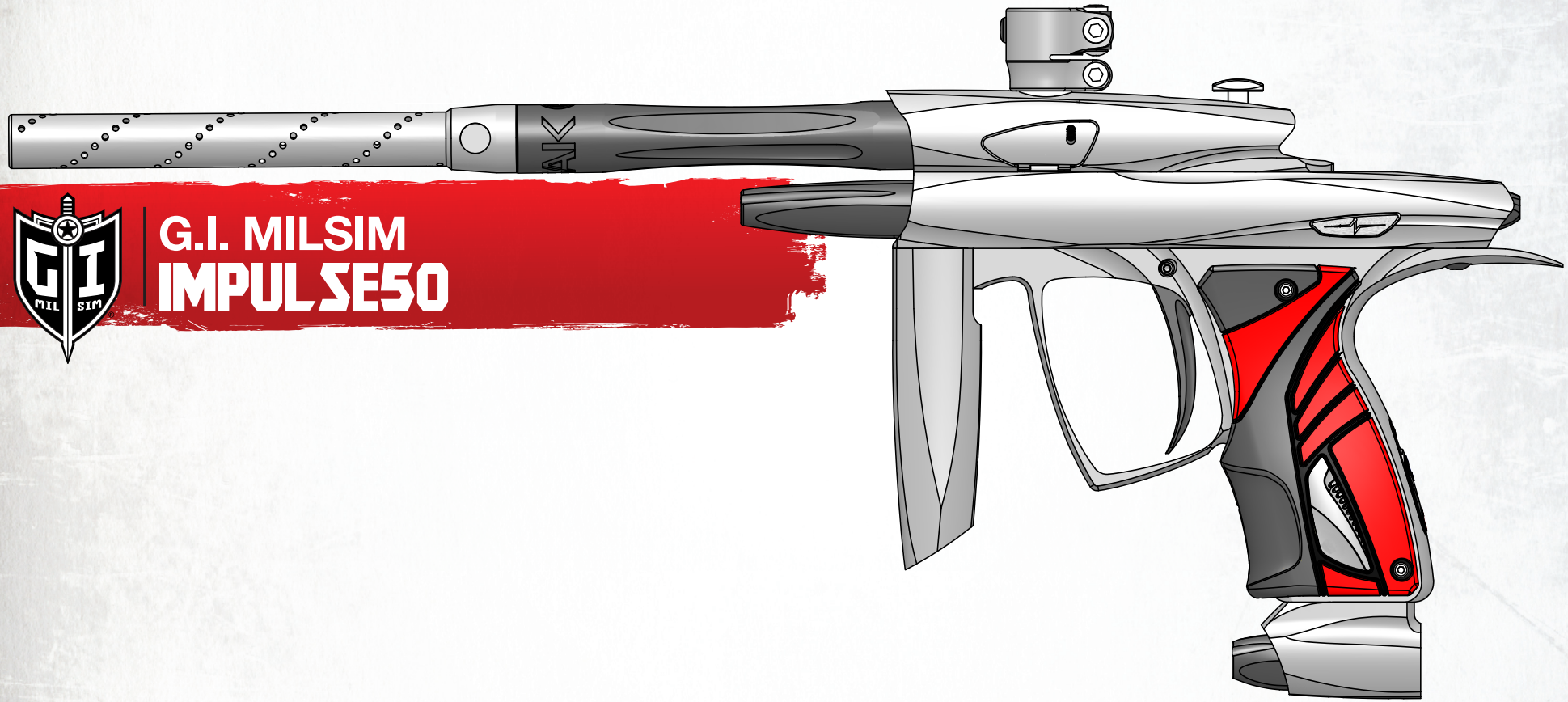

00 QUICK START

BARREL BLOCKER

Unpack the Impulse50 and screw the included barrel into the receiver. Slide the included barrel blocker over the muzzle and secure the cord over the back of the receiver in a position where it can not slide off, then cinch the cord tight. The barrel blocker is a critical piece of paintball safety equipment and must always be fully seated on the marker's muzzle and secured in place with its trap any time the marker is stored or handled in an area where people or property are not properly protected by paintball goggles or paintball field netting.

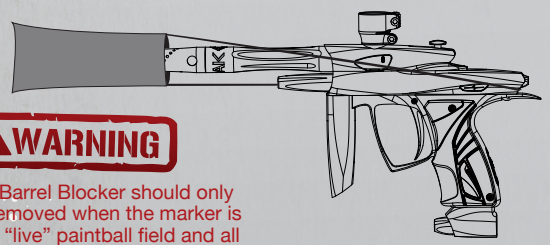

WARNING

The Barrel Blocker should only be removed when the marker is on a "live" paintball field and all persons involved are wearing proper paintball protection.

TURN ON GAS

Gently pressurize the Impulse50 by slowly turning the ASA on/off knob clockwise to open the valve in the CO_2 or HPA system valve. WARNING – A gentle rise in pressure is important, as a sudden blast may reduce the service life of the Impulse50's internals.

ATTACH TANK

The Impulse50 is compatible with both CO_2 and high-pressure compressed air (HPA). Screw-in style HPA systems or CO_2 tanks mount directly into the bottom-line on/off ASA at the bottom of the Impulse 50 grip frame. See the gases section of this manual for more information on optimal configuration of the Impulse50 with your gas system of choice. CO_2 and HPA bottles are sold and shipped empty, and must be filled before use.

WARNING Never use oil or any petroleum based cleaner or lubricant in an HPA system. Use only manufacturer recommended lubricants and strictly follow the manufacturer's instructions regarding their use.

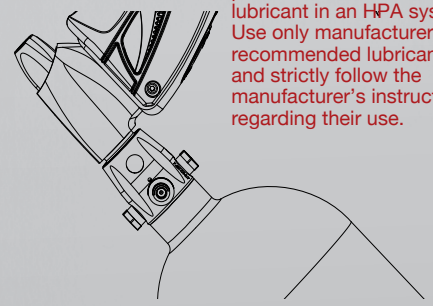

TURN ON POWER

Turn the marker on by pressing the power button. If the power button does not blink green to indicate a full charge, charge the battery - see the battery section for more information.

WARNING Although the power button serves as the Impulse50's safety switch to prevent accidental firing, it should never be relied upon in place of a barrel blocker and proper eye protection.

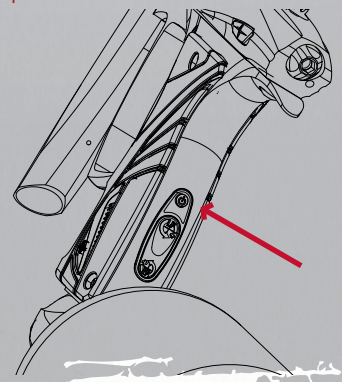

LOADER

Fit a 50 caliber loader into the feedneck of the Impulse50, open the feedneck lever, insert the loader then close the lever. Powered loaders will provide better performance than un-powered hoppers.

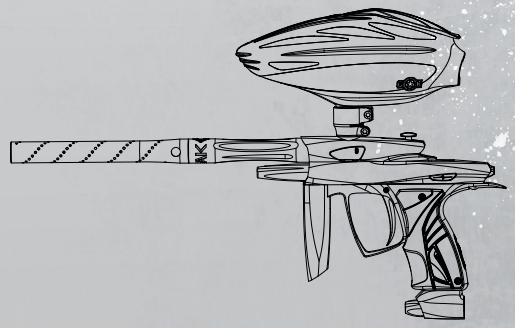

ADJUST VELOCITY

Fill the loader with paintballs and turn it on. While wearing ASTM compliant paintball goggles in an area where all bystanders are protected, remove the barrel blocker and fire over a chronograph to measure the velocity. Using a 3/32-inch allen-wrench, adjust the primary regulator through the lower (red) opening in the Impulse50 control panel on the rear of the grip frame. Turn counter-clockwise to increase velocity/pressure, and clockwise to decrease. Take three or four shots after every adjustment to allow the gas pressure inside the marker to stabilize. Adjust until the marker is firing consistently within the limits for the field where you are playing (for safety reasons, never adjust the Impulse50 to fire at greater than 300 feet per second.) If you are unable to reach the desired velocity, or for more advanved velocity and pressure adjustment instruction, see the pressure balancing section of this manual. Depending on what modes of fire are allowed at the field where you are playing (semi-automatic, PSP, etc.) you may need to adjust the Impulse50's Firing Mode. See the Firing Mode section for more information.

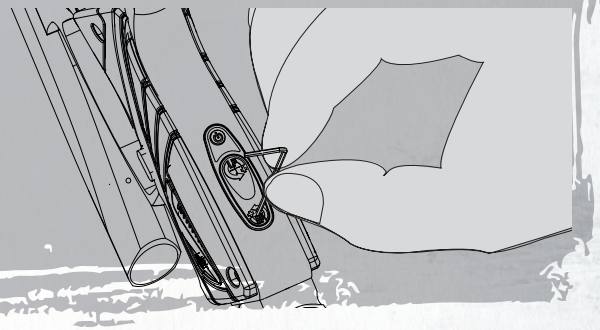

01 TABLE OF CONTENTS

⚠ WARNING

THE IMPULSE50 IS NOT A TOY

- MISUSE OF THE IMPULSE50 MAY RESULT IN SERIOUS INJURY OR DEATH.
- EYE PROTECTION SPECIFICALLY DESIGNED FOR PAINTBALL USE MUST BE IN COMPLIANCE WITH ASTM SPECIFICATION F1776 AND MUST BE USED BY THE USER AND ANYONE WITHIN RANGE OF THE IMPULSE50.
- G.I. MILSIM RECOMMENDS THAT THE IMPULSE50 ONLY BE SOLD TO PERSONS 18 AND OLDER.
- THOROUGHLY READ THE IMPULSE50 OPERATION AND INSTRUCTION MANUAL BEFORE OPERATING.
- TREAT EVERY PAINTBALL MARKER AS IF IT WERE LOADED.
- NEVER LOOK DOWN THE BARREL OF A PAINTBALL MARKER.
- KEEP YOUR FINGER OFF THE TRIGGER UNTIL READY TO SHOOT.
- NEVER POINT THE IMPULSE50 AT ANYTHING YOU DON'T WISH TO SHOOT.
- KEEP THE IMPULSE50 ON SAFE (POWER OFF) UNTIL READY TO SHOOT.
- KEEP THE BARREL BLOCKING DEVICE ON THE IMPULSE50'S MUZZLE WHEN NOT SHOOTING. (SEE BARREL BLOCKER SECTION).
- ALWAYS REMOVE PAINTBALLS AND DEGAS THE IMPULSE50 BEFORE DISASSEMBLY. (SEE DEGASSING SECTION).
- STORE AND TRANSPORT THE IMPULSE50 UNLOADED AND DEGASSED IN A SECURE PLACE.
- FOLLOW ALL MANUFACTURER'S WARNINGS AND INSTRUCTIONS FOR PROPELLANT SOURCE HANDLING, STORAGE, AND FILLING.
- DO NOT SHOOT FRAGILE OBJECTS SUCH AS WINDOWS.
- ALWAYS MEASURE THE VELOCITY OF PAINTBALLS FIRED BY THE IMPULSE50 BEFORE USE, AND NEVER ADJUST TO FIRE ABOVE 300FPS (91.44 M/S)

02 GETTING FAMILIAR

→ STATISTICS

OPERATING PRESSURE:	Approx. 260 psi, 280 psi max
PAINTBALLS:	.50 caliber – GI MilSim
POWER SOURCE:	9-volt lithium polymer battery
PROPELLANT:	CO_2 or Nitrogen/Compressed air
RATE OF FIRE:	Uncapped Semi-automatic - 20 bps max all other modes
OPERATION:	Low pressure electropneumatic
MODES OF FIRE:	All major tournament modes plus recreational modes
ANTI CHOP SYSTEM:	Break-Beam eye
BARREL THREAD:	GI-MilSim
GAS EFFICIENCY:	2500+ shots (68ci, 4500psi tank) – Efficiency will vary with paint, barrel and setting combinations.
LUBRICANT:	GI-LUBE

MAINTENANCE AND MOISTURE

The Impulse50 has been designed with simplicity in mind so that you can concentrate on your game instead of your marker. It has a minimal number of moving parts and seals so that you can maintain the marker with little effort. This DOES NOT mean that you should or can neglect your marker. For best performance, clean and lubricate your Impulse50 after each day of use. Rain, drizzle or foggy weather will not harm your Impulse50 or prevent it from functioning. Although the Impulse50 is able to keep playing through the wettest conditions, it should not be intentionally immersed in water. If it does become water-logged, disconnect the battery, field-strip the valve system and allow it to fully dry before reassembly.

03 BARREL BLOCKER & HOPPER

BARREL BLOCKER

Unpack the Impulse50 and screw the included barrel into the receiver. Slide the included barrel blocker over the muzzle and secure the cord over the back of the receiver in a position where it can not slide off, then cinch the cord tight. The barrel blocker is a critical piece of paintball safety equipment and must always be fully seated on the marker's muzzle and secured in place with its strap any time the marker is stored or handled in an area where people or property are not properly protected by paintball goggles or paintball field netting.

WARNING

The Barrel Blocker should only be removed when the marker is on a "live" paintball field and all persons involved are wearing proper paintball protection.

HOPPER

The Impulse50 is a high-performance electropneumatic paintgun. Although its anti-chop eye system will prevent paintballs from being chopped if they are not fed fast enough, the best shooting performance will only be possible with the use of a powered loader.

The Impulse50's locking feedneck allows it to clamp solidly and release quickly. Flipping the latch outward will open the locking mechanism and folding the latch into its slot, flush against the feedneck will cause it to clamp onto a hopper. If the feedneck is not gripping tightly enough, or can not be easily locked because it is too tight, it may be adjusted. Simply flip the feedneck latch to the open position, and turn its adjuster clockwise with an allen wrench to tighten the mechanism, or counter-clockwise to loosen.

BARREL BLOCKER

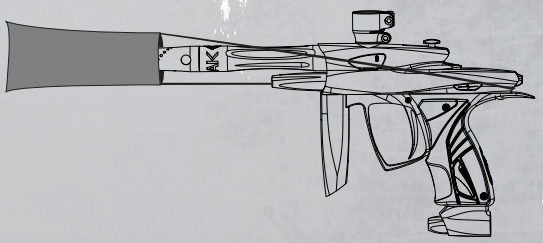

HOPPER

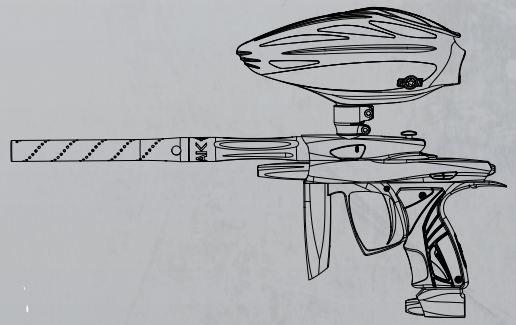

04 PAINTBALLS & GASES

WARNING

NEVER PUT OIL IN A COMPRESSED AIR REGULATOR OR TANK—ONLY APPLY MANUFACTURER SPECIFIED LUBRICANTS.

PAINTBALLS

The Impulse50 is designed to deliver optimal performance with fresh GI-MilSim 50 caliber paintballs. Although other 50 caliber paintballs will fit and fire through the marker, advancements in the encapsulation process used to produce GI-MilSim paintballs give them an edge over thicker shelled competing brands with less consistent shape. The use of GI-MilSim paintballs will ensure the best possible accuracy and the best chance of each paintball breaking on its target. Paintballs which have been stored in an unsealed container, stored for a long period of time, or exposed to temperature extremes will exhibit reduced performance.

GASES

The Impulse50 is designed to provide consistent operation when using either CO_2 or High Pressure Air (HPA) as a power source.

CO_2 tanks consist of a cylinder fitted with a screw-in valve designed to fit the Impulse50's Air System Adapter (ASA). CO_2 tanks store carbon dioxide as a liquid which continually produces more CO_2 gas in order to maintain pressure, until the cylinder is empty. CO_2 tanks are not equipped with pressure gauges, instead they are weighed to determine when they are full.

WARNING

The valves on CO_2 and High Pressure Air (HPA) tanks are not user-removable and it is vitally important that they are only removed or installed by a properly trained professional. Improper removal or installation may result in serious injury or death. Always read and follow the instructions included with any compressed gas system.

If CO_2 is able to enter the marker in liquid form, erratic velocity fluctuations may result as the liquid changes to gas, increasing pressure levels.

A relief valve built into the Impulse50 provides protection against over-pressurization damage caused by liquid CO_2. This ensures that the solenoid valve and fine internal seals will not be harmed by using CO_2.

The best performance on CO_2 can be obtained by ensuring that liquid CO_2 can not enter the Impulse50. Liquid CO_2 is heavier than CO_2 gas, making it simple to control.

HPA CYLINDER

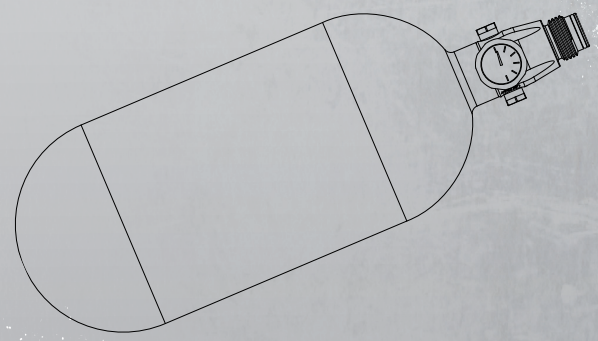

ANTI-SIPHON

An anti-siphon CO_2 tank has a tube inside which draws gaseous CO_2 from above the liquid CO_2, much like a diver's snorkel draws air from above the water. Anti-siphon systems must be professionally installed. Anti-siphon CO_2 valves will usually bear a mark, such as a stamped star on the neck of the valve, indicating the direction the anti-siphon tube is facing. It is important when screwing the CO_2 tank into the Impulse50's ASA, that the tank is rotated to a position where the indicator mark is facing up. If the anti-siphon tank is oriented incorrectly, the tube may be facing down, in which case it would force liquid CO_2 into the Impulse50.

Coiled remote hoses can also be used with a standard CO_2 tank to control liquid. By carrying the CO_2 tank vertically in a paintball pack, with a flexible hose running to the Impulse50, the CO_2 tank's valve is facing upwards, away from the liquid CO_2.

High Pressure Air (HPA) systems store compressed air at pressures between 3,000 and 4,500 psi, and use a regulator built into their valve to limit their pressure output to a range comparable to that of CO_2. Gauges built into HPA regulators indicate the amount of gas remaining in the cylinder, based on its pressure. Compared to CO_2, the combination of regulation single phase operation makes compressed air a more consistent and reliable power source for the Impulse50.

The Impulse50 should be used with screw-in style HPA systems pre-set to deliver a pressure of approximately 800 psi – commonly referred to as high-output HPA systems. If used with an adjustable output HPA system, it should be adjusted to deliver approximately 800 psi.

The regulator built into the Impulse50 will further restrict the air pressure to power the marker's low-pressure operation.

ANTI-SIPHON (CUTAWAY VIEW)

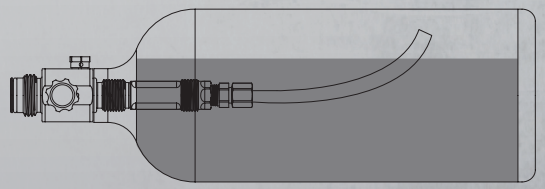

06 AIR SYSTEM ADAPTER

AIR SYSTEM ADAPTER

The Impulse integrated air system means that there are no hoses or hose fittings anywhere on the inside or the outside of the marker. Instead gas is channeled through passages machined into the Impulse50 body and grip frame, greatly reducing the possibility of leaks.

The Impulse50 bottom-line style Air System Adapter (ASA) is mounted to its grip frame by a pair of paintball industry standard inline 10-32 screws.

To remove the bottom-line ASA for cleaning or replacement, unload and degas the Impulse50 following the instructions in this manual. Remove the compressed air system from the ASA, and remove the ASA control knob by fully unscrewing it from the ASA body.

Using a 5/32-inch allen wrench, access the two screws securing the ASA from underneath the ASA body. Once these have been unscrewed, they may be individually slid to the center of the ASA and lifted out the top.

Installation is performed in a reverse of the removal process, making certain that the integrated air o-ring is properly seated in the bottom of the Impulse50 grip frame before attaching the ASA. Lightly lubricate the ASA control knob o-ring with GI-LUBE.

If a slightly lower air system placement is desired, the optional integrated air drop rail may be installed between the ASA and the grip frame. Both the rail's integrated air o-ring, as well as that of the grip frame, must be inspected and the longer ASA screws included with the rail must be used.

WARNING

Even after the ASA has been vented, enough gas pressure may be stored within the Impulse50 to fire one or more shots.

REMOVE ASA CONTROL KNOB

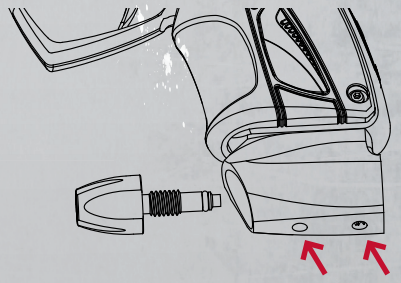

ASA MOUNT SCREWS AND O-RING

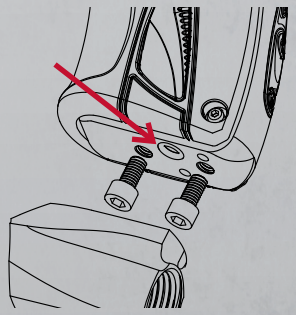

INSTALLING DROP RAIL

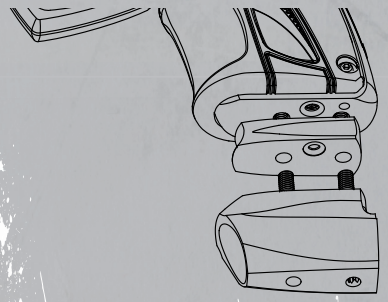

07 ALL ABOUT THE BATTERY

BATTERY SAFETY

The Impulse50 uses a Lithium Polymer battery as its power source. To ensure a long and safe operational life, the battery must be handled with care. Do not expose the battery to high temperatures, such as leaving it out in strong sunlight or an enclosed vehicle in hot weather for a prolonged period of time. Do not expose the battery to high levels of static electricity, as this may damage its on-board control circuits. These types of situations may cause damage leading to fire or explosion. If the battery leaks, avoid contact with the fluids. In case of eye contact, do not rub. Rinse with clean running water and seek medical attention immediately or loss of sight may occur. If the battery gives off an odor, generates heat, becomes discolored/deformed or appears abnormal, remove it from any connected device and place it in a metal box for immediate disposal.

When traveling, make sure that any spare Impulse50 batteries are protected from moisture or physical damage. Check with your airline and or the Transportation Safety Administration for specific policies regarding packing and transport of Lithium batteries on passenger aircraft.

⚠ WARNING

Use only the supplied charger, or an Impulse50 approved charger from GI-MilSim. Use of aftermarket chargers or batteries may risk of cause fire or explosion.

BATTERY

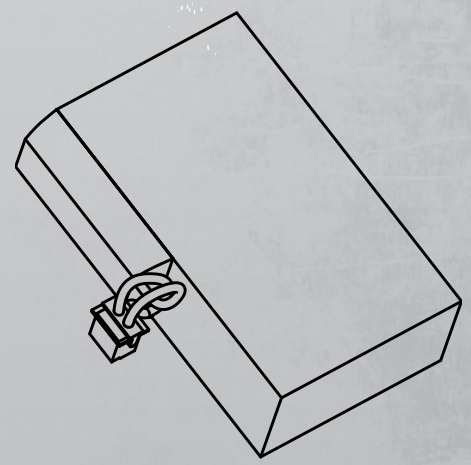

08 BATTERY CHARGING

CHARGE LEVELS

The Impulse50 battery uses Lithium Polymer chemistry, the same type of batteries used to power mobile phones. In addition to rapid charging capabilities, the LiPO batteries are immune to “battery memory” effects caused by only draining them part way. When the Impulse50 is turned on, the status LED in the Impulse50 control panel at the rear of the grip frame will blink five times, indicating an estimate of the battery’s charge level. Because battery discharge rates vary with load and temperature, it is best to always make sure the Impulse50 is fully charged before a day’s play, rather than rely on the charge level estimate.

CHARGING

To charge the Impulse50, unload and degas the marker following the instructions in this manual. Use a 5/64-inch allen wrench to open the left side of the rubber grip and connect the Impulse50 charger to the charging port before plugging the charger into a domestic 110 or 240 volt AC electrical outlet (plug prong adapters may be needed outside of US, Canada or Mexico). The charger LED will glow red to indicate that the battery is charging and green when charging is complete. Unplug the charger from the wall outlet, then from the Impulse50. Close and resecure the grip before use. Mobile charging from a car’s electrical system may be accomplished by plugging the Impulse50 charger into a 120 volt AC power inverter, or obtaining an optional GI-MilSim Impulse50 12-volt charger.

BATTERY SWAP

Swapping a low battery for a fully charged battery can be used as a rapid alternative to charging when either the electrical power or the time needed to charge is unavailable. To exchange the Impulse50 battery, unload and degas the marker, then open the left side of the grip, the same as when charging. Gently lift out the battery, taking care not to strain its leads. Unplug the battery from the Impulse50 circuit board, taking care to pull on the connector itself, not the leads. Plug in and install the new battery. The battery plugs into a small white connector located just above the black charging port. Battery orientation is important. The battery is not completely rectangular, the bulge in the battery’s edge created by its internal discharge control circuit board should be oriented to the top and front, above the charging port in the grip frame. The battery connection is charge-oriented, and designed so that it can not be plugged in backwards. If the battery connector does not plug in easily, do not force it, try reversing it, make sure the plug us facing the correct direction. Make sure the battery leads (wires) are tucked neatly into the grip frame before closing and resecuring the grip. Later, when charging is available, charge the battery in the marker, then swap batteries again and charge the low battery in the marker.

CHARGING PORT

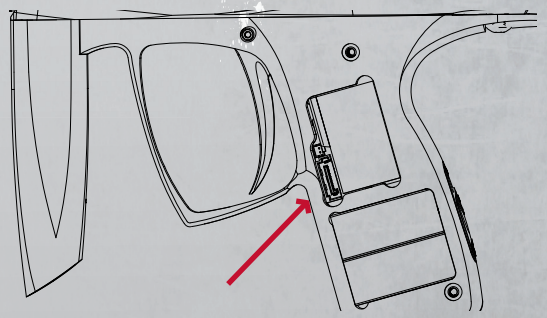

BATTERY ORIENTATION

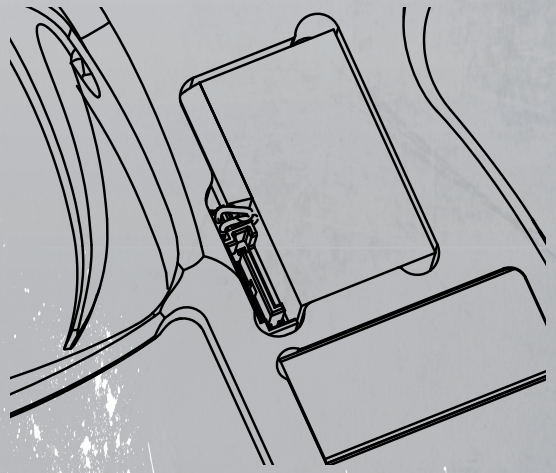

09 VELOCITY & ANTI-CHOP

VELOCITY

The velocity, or speed at which the Impulse50 fires a paintball, must be measured and adjusted to below the paintball field's velocity limit immediately before each day of play (for player safety.) If CO_2 is used, velocity should be checked and adjusted multiple times during the day. In an area where it is safe to fire paintballs, while wearing ASTM compliant eye and face protection for paintball, fire three or four shots over a chronograph to measure the velocity at which the paint is being fired.

If velocity adjustment is necessary, use a 3/32-inch allen-wrench to adjust the primary regulator. Adjustment is made through the center of the circular red arrow on the Impulse50 control panel at the rear of the grip frame. Turn counter-clockwise to increase velocity/pressure, and clockwise to decrease. Take three or four shots after every adjustment to allow the gas pressure inside the marker to stabilize. Measure velocity with the chronograph, and continue adjusting until the marker is firing consistently within the velocity limits for the field where you are playing. Reinstall the rubber cover when finished. For safety reasons, never adjust the Impulse50 to fire at greater than 300 feet per second.

ANTI-CHOP

When the Impulse50 is turned on, its break-beam anti-chop system will be activated by default. The internal infra-red eye will be used to detect whether or not a paintball is in the breech. This feature practically eliminates the possibility of a chopped paintball. Anti-chop mode is indicated by a green glow of the status LED on the Impulse50 at the rear of the grip frame. Anti-chop can be de-activated by pressing the power button for 1/2-second while the Impulse50 is on. Anti-chop off is indicated by a red glow of the Impulse50 control panel LED. Anti-chop may be turned back on by once again pressing the power button for 1/2-second.

INCREASING VELOCITY

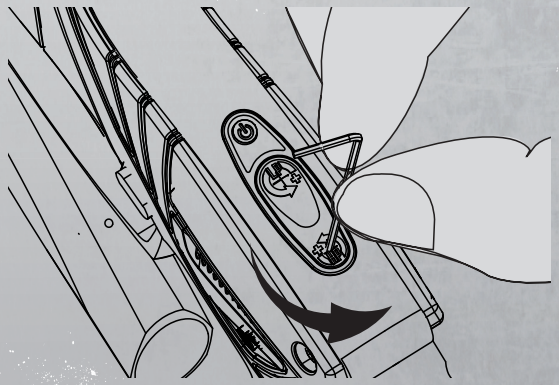

10 PRESSURE BALANCING

PRESSURE INTERACTION

The velocity and cyclic rate of the Impulse50 depend on the balance of three settings. The dwell setting affects how long the marker will hold open its solenoid valve to drive the firing piston towards the pressure balanced poppet valve. The pressure setting of the primary regulator will determine the pressure of gas released each time the valve opens, and the pressure setting of the second-stage regulator will determine the pressure of the gas used to drive the ram forward.

The interrelationship of these three adjustments affect how long the poppet valve stays open. This in turn has a direct effect on the marker's feel, sound signature and efficiency. The Impulse50 valve uses seals that expose both ends of the valve core to the atmosphere in order to balance against internal gas pressure. It takes very little force to open the valve, regardless of the pressure of the gas it is controlling. This allows the Impulse50 to fire reliably with a variety of pressure and volume combinations while still using a very low pressure on the firing piston, making the marker gentle with brittle paint and giving it almost no recoil.

For best all-around performance, GI-MilSim recommends the following initial set-up proceedure for balancing dwell and pressure settings. Further tuning to personal taste may be done from there, but if the marker becomes unbalanced and performs poorly, performing the pressure balancing procedure will restore reliable operation.

Set the dwell timing to its default value of 8ms, following the electronic adjustment section of this manual.

Using a 3/32-inch allen-wrench through the Impulse50 control panel on the rear of the grip frame, turn the lower adjustment screw (red) all the way in (clockwise) then back out 6 turns. This will place the primary regulator at its factory default setting.

Next, while wearing paintball goggles, and in a safe area (such as the chrono range at a paintball field) turn the the upper (blue) adjustment screw all the way in. Then set the second-stage regulator by backing the adjuster out while firing over a chronograph until the Impulse50 can fire consecutive shots with consistent velocity. Finally set the velocity following the velocity adjustment procedure.

⚠ WARNING

Always follow the velocity adjusting procedure after making any pressure adjustments to ensure that the Impulse50 is not fired at velocities over 300 feet per second. If, after adjustment, the Impulse50 shows inconsistent velocity, increase the second-stage (upper blue) regulator pressure by adjusting counter-clockwise with a 3/32-inch allen wrench.

ADJUSTING PRIMARY REGULATOR

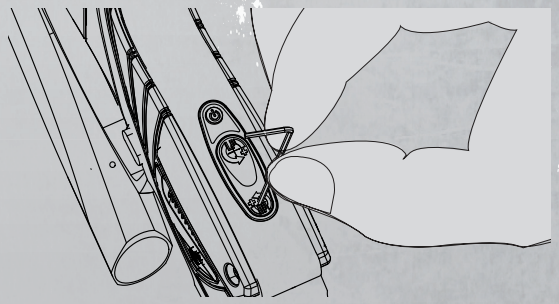

ADJUSTING SECOND STAGE REGULATOR

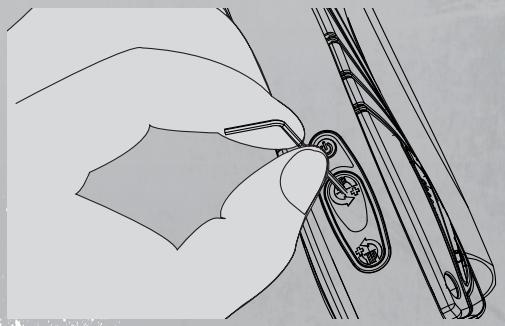

11 ELECTRONIC ADJUSTMENT

TOURNAMENT LOCK

Most paintball tournaments, scenario games and fields have rules which do not allow a player to make adjustments that can affect velocity (such as dwell) or firing mode during a game. These rules require that a marker be locked so that such adjustments can not be made without using tools, which are not allowed on-field. Although used in all types of paintball, this is commonly called a tournament lock. To lock or unlock the Impulse50 circuit board, unload and degas the marker following the instructions in this manual, then use a 5/64-inch allen-wrench to open the right side of the rubber grip. Turn the Impulse50 on, then press and hold the tournament lock button for approximately two seconds. The Impulse50 indicator LED will blink twice to indicate that the field-lock has been toggled. The LED will blink red to indicate that the marker has been locked, or green to indicate that it has been unlocked.

PROGRAMMING

Enter programming mode after the marker has been unloaded and degassed by holding the trigger back and then pressing the power button to turn the marker on, then releasing the trigger. Once in programming mode, pull the trigger to cycle through the available parameters. The speed and color at which the LED on the Impulse50 control panel blinks will indicate the selected parameter. If the marker will not switch into programming mode, the Impulse50 is locked, and must be unlocked before changes can be made.

When the desired parameter is selected, wait approximately five seconds, and the LED will blink light blue, with the number of blinks corresponding to the parameter's current value. To enter a new value, pull and hold the trigger until the LED turns off, then pull the trigger a number of times corresponding to the desired setting. The LED will blink light blue a number of times to confirm that a new value has been set. To exit programming mode, press and hold the power button, turning the marker off.

TOURNAMENT LOCK

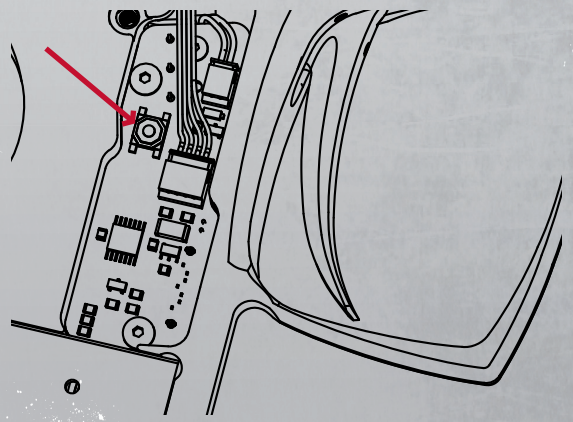

Checking the Software version - The software driving the Impulse50 can be flash-updated by GI-MilSim factory technicians to keep pace with changing tournament rules. The Impulse50 software version number can be checked by unloading and degassing the marker, and turning it on, then pressing the tournament lock button for five full seconds. The LED will turn white, and turn off after two seconds, but the button must be held for the full five seconds. After the button is released, the LED will stay dark for one second, then it will blink blue, a number of times indicating the major revision number, followed by a series of white blinks to indicate the minor revision number. As an example, a single blue blink, followed by two white blinks would indicated Impulse50 software version 1.2.

12 ELECTRONIC ADJUSTMENT FIRING MODES

NOTE: IMPULSE50 MARKERS SOLD IN THE UNITED KINGDOM ARE LIMITED TO FIRING IN THE FOLLOWING MODES: 1-SEMI-AUTOMATIC, 2-CAPPED SEMI-AUTOMATIC, 3-RAMPING, 4-PUMP-SIM

FIRING MODES (LED: *Solid Red*) The Impulse50's firing mode parameter determines how the marker fires relative to how the trigger is pulled.

1. Semi-Automatic: One shot per trigger pull (uncapped.) This is the default firing mode for the Impulse50.
2. Capped Semi-Automatic: One shot per trigger pull, limited by BPS Cap setting.
3. NXL: Fires one shot per trigger pull until the trigger is pulled three times in quick succession at which point it fires repeatedly while the trigger is held or pulled quickly. After one second of inactivity, NXL mode reverts to firing one shot per trigger pull.
4. PSP: Fires one shot per trigger pull until the trigger is pulled three times in quick succession at which point it switches into a ramping mode firing more than one shot per trigger pull while the player pulls the trigger repeatedly. After one second of inactivity, PSP mode reverts to its beginning single shot per pull operation.
5. Millennium: Fires one shot per trigger pull until the trigger is pulled at a rate of 8 times per second or faster, at which point it begins firing more than one shot per trigger pull. When the user pulls the trigger at rates below 8 times per second, Millennium mode reverts to firing one shot per trigger pull.
6. CFOA: Fires one shot per trigger pull until the trigger is pulled three times at a rate of 5.5 times per second or faster, at which point more than one ball is fired per trigger pull, until the rate of trigger pulls drops below 5.5 per second, at which point CFOA mode reverts to firing one shot per trigger pull.
7. Auto Response: Fires both on the pull and release of the trigger.
8. Ramping: Fires one shot per trigger pull until the rate set in the Shots To Enter parameter is achieved. The Impulse50 will then fire more than one shot per trigger pull, as long as the trigger is pulled as fast, or faster than the value set in the Shots To Sustain parameter.
9. Full-Automatic: When the trigger is pulled and held, the Impulse50 will fire repeatedly until the trigger is released.
10. Burst Mode: When the trigger is pulled, the Impulse50 fires a number of shots, determined by the value set in the Burst Length parameter.
11. Pump-Sim: The Impulse50 fires one shot per trigger pull, restricted to extremely low rates of fire, for playing on an even footing against new paintball players, players with Pump-Sim equipped markers, or paintball players with pump-action markers. Pump-Sim games offer a less intimidating introduction to paintball for new players, and a game style similar to the early days of paintball, relying more on movement and stealth than high volume firing.

FACTORY RESET
The Impulse50 circuit board can be quickly and easily reset to all of its factory default values. While the board is unlocked, and the marker is unloaded and degassed, hold down the trigger and press the power button. Continue holding the trigger for ten seconds until the status LED flashes white. Release the trigger, and all parameters will have been reset to their default values.

13 ELECTRONIC ADJUSTMENT CONTINUED

WARNING

THE IMPULSE50 MUST BE UNLOADED AND DEGASSED PRIOR TO MAKING ANY ELECTRONIC ADJUSTMENTS.

DWELL (LED: *Solid Green*) The dwell parameter determines how long the Impulse50 energizes its solenoid valve to cycle the ram and fire each shot. If the dwell is set too low, the bolt may not close completely, and the ram may not strike against the poppet valve hard enough to fire a full velocity shot. If the dwell is set too high, the poppet valve may be held open longer than is necessary, resulting in reduced gas efficiency. Dwell is adjustable from 1 to 25 milliseconds, with a default value of 8ms.

ROF Cap (LED: *Solid Yellow*) The Rate Of Fire Cap places a limit on how many balls per second the Impulse50 may shoot. The ROF Cap is adjustable from 5 to 20 bps. The ROF Cap affects all modes except uncapped semi-automatic. The default ROF Cap is 10 balls per second.

ROF Fine Adjust (LED: *Solid Blue*) The ROF Fine adjust may be set between zero and 0.75 balls per second in 0.25 ms increments (1=0.00bps, 2=0.25bps, 3=0.50bps, 4=0.75bps) This value is added to the ROF Cap setting. ROF Fine Adjust is only used in PSP, Millennium and CFOA firing modes. The default setting for ROF Fine Adjust is one (0bps).

FSDO (LED: *Solid White*) The Impulse50 is equipped with a First Shot Drop Off (FSDO) compensation function. Sometimes the pneumatics system in a marker will bind slightly when it is not fired for a period of time, resulting in a slower response. If the marker starts firing slower than normal, the dwell time will have expired before the valve has been fully opened. FSDO compensation corrects this problem by increasing the dwell time on the first shot in a string that is fired after the marker has been at rest. The FSDO parameter sets how much the dwell time will be increased for the first shot and is adjustable between 0 and 15 milliseconds. The length of FSDO compensation will be the value of this setting minus one (a setting of 5=4 milliseconds.) A setting of one (0ms) will turn off the FSDO Compensation. The default FSDO setting is 3 (2ms).

FSDO Timer (LED: *Solid Purple*) This value sets the amount of time the marker must be at rest before FSDO Compensation is activated. The FSDO Timer is adjustable from 30 seconds to 2 minutes in 30 second intervals (1=30sec, 2=1minute, 3=1.5 minutes, 4=2 minutes) and has a default value of 1 (30 seconds).

Loader Debounce (LED: *Slow Blink Red*) For reliability, the anti-chop eye is located mid-way in the Impulse50's breech, meaning that it will detect a paintball before the ball is completly seated. The Loader Debounce setting specifies how long the Impulse50 will wait after first detecting a paintball before firing in order to allow the paintball to fully seat itself. Loader Debounce is adjustable from 1 to 11 (0 to 10 milliseconds) and has a default setting of 1 (0ms).

Trigger Debounce (LED: *Slow Blink Green*) The operating software in the Impulse50 filters out electronic noise caused by the contacts in the trigger switch. Trigger Debounce sets the minimum length of time a signal must be detected in order to be considered a valid trigger pull. Trigger Debounce is adjustable from 1 to 10 milliseconds and has a default value of 8ms. CAUTION: Setting trigger debounce too low may result in the Impulse50 firing more than one shot per full pull of the trigger and may not be allowed under some tournament or field rules.

Mechanical Debounce (LED: *Slow Blink Yellow)* The Impulse50 also filters out signals from the trigger switch that were most likely caused by internal vibration of the marker. Mechanical debounce is adjustable between 1 and 5 with a default value of 1 (off). CAUTION: Improperly set mechanical debounce may cause additional shots to be fired similar to low Trigger Debounce settings.

ELECTRONIC ADJUSTMENT CONTINUED

WARNING

THE IMPULSE50 MUST BE UNLOADED AND DEGASSED PRIOR TO MAKING ANY ELECTRONIC ADJUSTMENTS.

Auto Off (LED: *Slow Blink Blue)* To conserve its battery charge, the Impulse50 will turn itself off when it is unused for an extended period of time. The amount of time to auto-shutdown is adjustable from 5 to 39 minutes in one minute increments, with 30 minutes as the default.

Anti-Chop Modes (LED: *Slow Blink White)* How the anti-chop system responds when the trigger is pulled and no paintball is loaded depends on the configuration of this parameter. At a setting of 1 (default) the marker is in classic anti-chop mode and will only fire if a paintball has been detected. A setting of 2 is delayed anti-chop and will wait up to half a second to detect a paintball before firing. A setting of 3 selects forced anti-chop which will not fire without a paintball in the breech unless the trigger is pulled and held for a full second.

Bypass ROF (LED: *Slow Blink Purple)* Regardless of the selected firing mode, this lower rate of fire cap will be used when the anti-chop system is turned off. Bypass may be set from 6 to 12 balls per second and is set to 10 bps by default.

Pulls to enter (LED: *Fast Blink Red)* This parameter sets the number of consecutive trigger pulls that must be made at the Sustain Rate in order for the Ramping firing mode to activate and fire more than one shot per trigger pull. This parameter may be set from 1 to 5 and is set at 3 by default.

Sustain Rate (LED: *Fast Blink Green)* This is the rate at which the trigger must be pulled to activate and remain in the Ramping firing mode. The Sustain Rate is adjustable from 2 to 10 pulls per second and is set at 3 by default.

Burst Duration (LED: *Fast Blink Yellow)* The Burst Duration parameter specifies the number of shots per trigger pull-and-hold that the Impulse50 will fire in burst mode. This parameter may be set from 2 to 4 shots and is set at 3 by default.

Pump-Sim ROF (LED: *Fast Blink Blue)* This parameter sets the extra low Rate Of Fire Cap that is used in the Pump-Sim firing mode. By default this setting is 0.5 balls per second (one shot every two seconds). The Pump-Sim ROF may be set from 0.5 to 2 balls per second (1=0.5bps, 2=1.5bps, 4=2bps).

15 TRIGGER ADJUSTMENT

TRIGGER ADJUSTMENT

The Impulse50 has four main points of trigger adjustment providing the ability to set up the perfect trigger for any player's style of play. Adjustments in the pre-travel, post-travel, return tension, and switch activation are possible with a wide range of adjustment for each. It may be tempting to set your Impulse50 to the shortest, lightest trigger pull possible, and that is easy to do. Many players however opt for a slightly longer pull with enough resistance that the trigger resets more positively, allowing them to walk the trigger to higher rates of fire. No matter what kind of trigger pull suits your fancy, it's easy to get the Impulse50 trigger balanced to your taste. All four adjustment points are located near the trigger pivot point. All trigger adjustments are performed with a .050-inch allen-wrench.

PRE-TRAVEL determines how far the trigger is allowed to swing forward after it is released. The pre-travel screw located on the left side of the grip frame, just below and behind the trigger pivot point. Turn the pre-travel screw counter clockwise to allow the trigger to reset further forward or clockwise to reduce pre-travel. Turning too far in will keep the trigger from resetting after each shot.

POST-TRAVEL determines how far back the trigger is allowed to move. The post-travel adjustment screw is located just forward of the pre-travel screw. To reduce post-travel turn this screw clockwise. Turn counter-clockwise to increase. Turning the post-travel screw too far will prevent the trigger from moving far enough back to activate the trigger switch and fire the Impulse50.

TRIGGER ACTIVATION POINT affects the point in the trigger pull where the trigger switch is activated. This adjustment screw is located at the upper end of the trigger's face. Turn the screw in (clockwise) to make the trigger activate earlier in the trigger pull or turn the screw out (counter-clockwise) to activate later in the trigger pull. Turning the trigger activation point screw too far in or too far out can and will cause the trigger not to activate.

TRIGGER RETURN FORCE defines how hard the Impulse50 trigger is to pull. This adjustment screw is located at the very top, front extension of the trigger. Turning clockwise moves the steel screw closer to the rare-earth trigger return magnet, increasing trigger pull weight, while turning counter-clockwise moves the screw further away, decreasing trigger resistance.

ADJUSTMENT POINTS

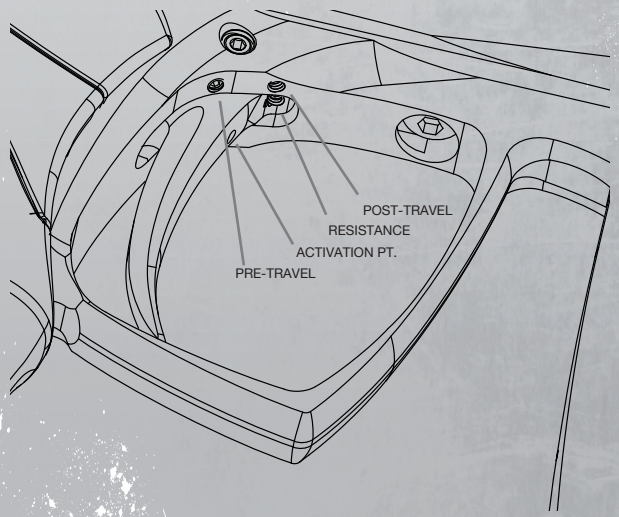

WARNING Turning the trigger point activation screw in too far can cause SEVERE TRIGGER SWITCH DAMAGE. When you finish making adjustments, the trigger should stop with a solid feel as the post-travel adjuster makes contact. It the activation point adjuster is in too far, the end of the trigger pull will have a mushy feel, and the trigger switch may suffer damage from hard or rapid trigger pulls.

FREAK 50 CAL BARREL

BARREL SYSTEM

The Impulse50 barrel is compatible with the The Freak 50 caliber barrel system and consists of three main components, all of which are protected by an ultra-smooth hard-anodized finish for a durable super-low friction interior.

The back section is equipped with GI-MilSim barrel threads for 50 caliber markers.

Inside the barrel back is a Freak 50 caliber insert for general paintball use. The addition of a 50 caliber Freak Kit will allow barrel inserts to be selected to closely match changing paint conditions for optimal efficiency and accuracy.

The barrel may be disassembled by simply unscrewing the front section from the back. The insert is removed by sticking a clean fingertip in either end and bending the finger, so that the pad of the finger and knuckle grip against opposite sides of the bore, then pulling out the insert.

O-rings on the rear threads of the front and back sections provide friction so that firing vibration will not unscrew them during operation. These o-rings should not be lubricated as lubrication would reduce their effectiveness. Two o-rings inside the back section keep the bore insert in place, and if removal of the insert is difficult, they may be lubricated *very sparingly* with GI-LUBE.

WARNING The Freak bore insert can be damaged if packed loose in a gear bag. Always store or transport the insert in the barrel back, The Freak case or similar protective case.

BARREL COMPONENTS

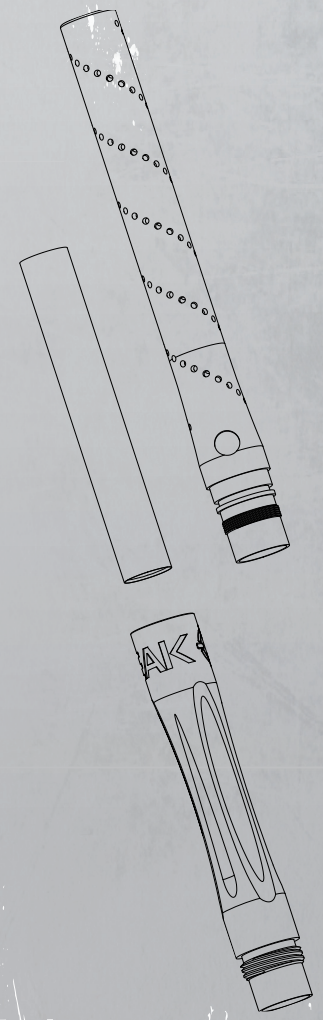

UNLOADING AND DEGASSING

WARNING

Always watch compressed gas cylinders to make sure that the cylinder and valve are unscrewing from the ASA, and that the cylinder is not unscrewing from its valve. If the cylinder does begin to separate from its valve STOP IMMEDIATELY and seek professional assistance.

After use and before transportation, maintenance or storage, the Impulse50 must be unloaded and degassed. In an area where it is safe to shoot, and all persons are protected by paintball goggles or netting (such as the chronograph area at a paintball field) remove the hopper from the Impulse50. By turning the Impulse50 upside down, any paintballs in the feedneck can be shaken out.

Turn the Impulse50 on, then de-activate the anti-chop system by pressing the power button for approximately one-half second. Dry-fire the Impulse50 in a safe direction to ensure that no paintballs remain inside.

Turn off the ASA by turning the control knob counter-clockwise, then remove the CO_2 tank or HPA system.

Continue to dry-fire the Impulse50 in a safe direction until all the gas pressure inside has been released and only the chirp of the solenoid valve is heard each time the trigger is pulled.

WARNING

Even with no CO_2 or compressed air system attached, the Impulse50 may still have enough gas pressure stored in the regulator and firing chamber to fire one or more shots.

FIELD STRIPPING

NOTE: Unload and degas the Impulse50 before performing any cleaning or maintenance work.

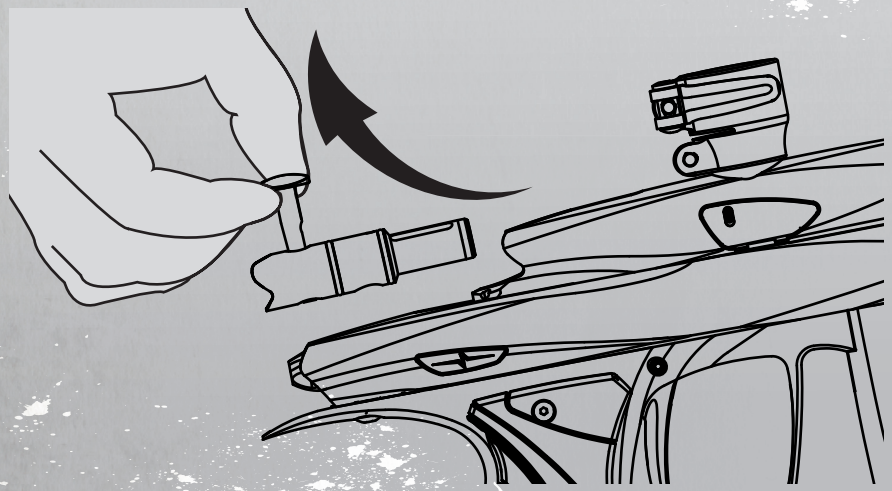

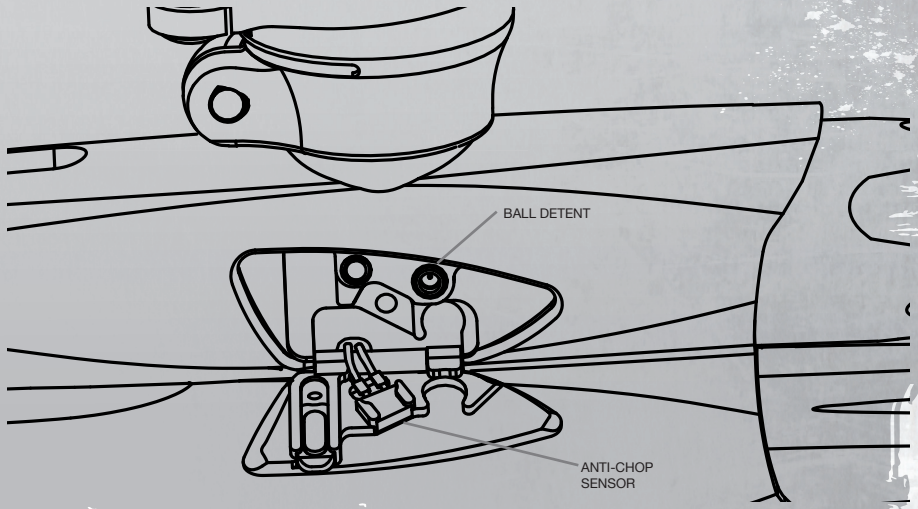

FIELD STRIPPING THE IMPULSE50

Both the bolt and eye covers of the Impulse50 may be quickly removed or opened without the use of tools for easy cleaning in the field.

To remove the Impulse50 bolt, lift the head of the bolt pin up and rear-ward, sliding the bolt out of the upper receiver. The bolt's o-ring may be very lightly lubricated with GI-LUBE – but do not lubricate the bolt itself, as it is made from low-friction nylon, and oil or grease may capture debris.

After cleaning the bolt with a soft cloth and the breech with a squeegee, replace the bolt, locking its pin down into the firing piston. If the bolt slides freely while the marker is tilted forward and back, the bolt pin has not engaged the piston.

Both the sensor and emitter for the Impulse50 anti-chop system are protected by hinged eye covers. For cleaning access, simply slide the eye cover's release latch and allow the cover to swing open. A cotton swab may be used to clean in and around the spaces under the eye cover.

While the eye cover is open, be sure to check the ball detent. A worn or damaged detent can lead to double-feeding and or chopped paintballs. With the barrel removed, use a finger tip to press the detent out from the inside of the breech for inspection and cleaning.

After inspection and cleaning of the anti-chop system and ball detents, make sure both are properly seated, then close the eye cover, allowing it to latch automatically.

19 PISTON & VALVE CLEANING

NOTE: Unload and degas the Impulse50 before performing any cleaning or maintenance work.

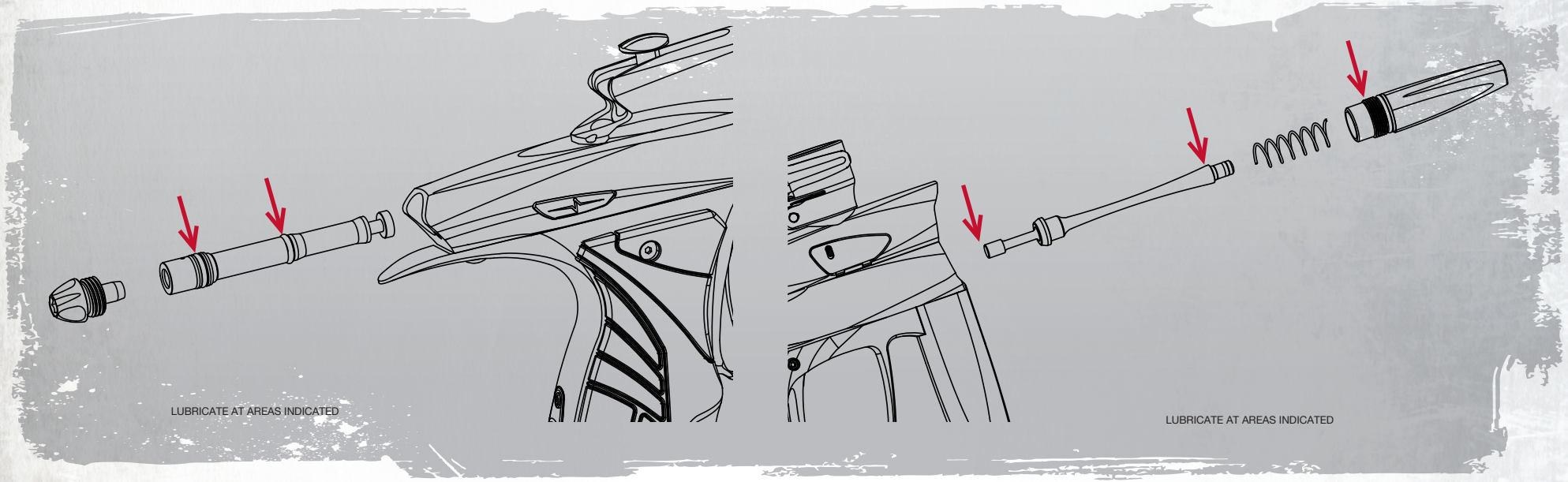

REGULAR MAINTENANCE OF THE IMPULSE50

The firing piston opens and closes the Impulse50's bolt, and opens the valve to fire a paintball. Its movement is caused by low-pressure gas, controlled by the solenoid valve inside the marker's grip frame. Remove the bolt, and use a 3/16-inch allen wrench to unscrew the rear cap from the Impulse50. Using the same allen wrench, reach through the bolt pin slot in the upper receiver and push the piston out the back of the Impulse50.

Clean the piston and lower body interior as needed with a cotton swab and inspect all o-rings and the rubber bumper in the back of the piston for signs of damage – replace if necessary. When finished, lightly lubricate all of the o-rings with GI-LUBE and reinsert the piston into the rear of the Impulse50.

Gently place the rear cap in position and turn the first few turns gently by hand to ensure that it is not cross-threaded. Secure the rear cap with the long end of the allen wrench, making sure it is seated firm, but do-not over-tighten.

The heart of the Impulse50 is its pressure-balanced firing valve. The valve chamber holds air at a pressure determined by the marker's primary regulator. When the Impulse50 is fired, the piston pushes the firing valve core, sliding it forward and allowing gas to flow around its seat, up and through the bolt to fire a paintball.

To clean and inspect the valve core, the marker must first be unloaded and degassed. Grasp the valve housing and unscrew it from the lower receiver. If the valve housing is too tight to turn easily by hand, use a 1/4-inch allen wrench for removal. Both the valve spring and valve core may be lifted out by hand. After cleaning, use GI-LUBE to lightly lubricate the valve core and valve housing o-rings as well as the rear pin on the valve core.

20 FOREGRIP & CIRCUIT REMOVAL

ADVANCED REPAIR OF THE IMPULSE50

Using a 3/8-inch allen wrench, remove the relief valve from the bottom of the foregrip.

Use a long 3/16-inch allen wrench to remove the foregrip mounting screw from inside the top of the foregrip.

Before re-assembly make sure the foregrip o-ring is clean, undamaged and seated properly in the top of the foregrip.

Make sure the relief valve is clean and nothing is obstructing its gas ports. The relief valve protects the entire Impulse50 from over-pressure damage. The relief valve o-ring should be lightly lubricated with GI-LUBE.

To remove the Impulse50 circuit board, first remove the battery, following the instructions in this manual.

Unplug the anti-chop wiring harness and the solenoid valve from the right side of the circuit board.

Using a 1/16-inch allen wrench, remove the two circuit board mounting screws, then lift the circuit board from the grip frame.

Reinstall in a reverse of the same process, taking care not to over-tighten the mounting screws. If the head of the lower screw is large enough to overlap a component on the circuit board, take extreme care not to over-tighten and cause damage.

RELIEF VALVE

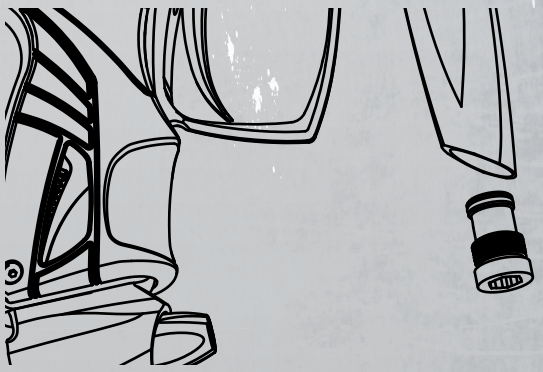

FOREGRIP MOUNT SCREW

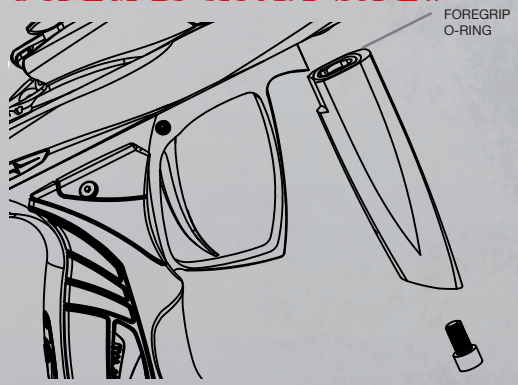

REMOVING CIRCUIT BOARD

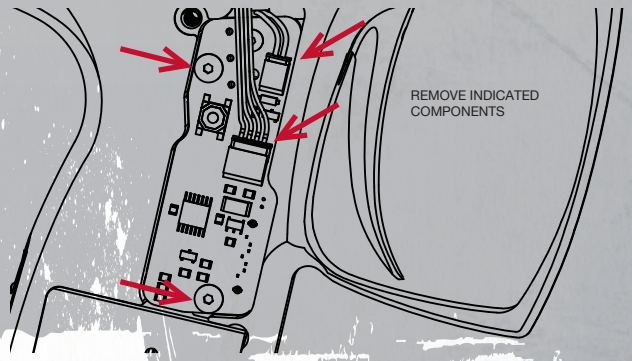

21 REGULATOR MAINTENANCE

NOTE: Unload and degas the Impulse50 before performing any cleaning or maintenance work.

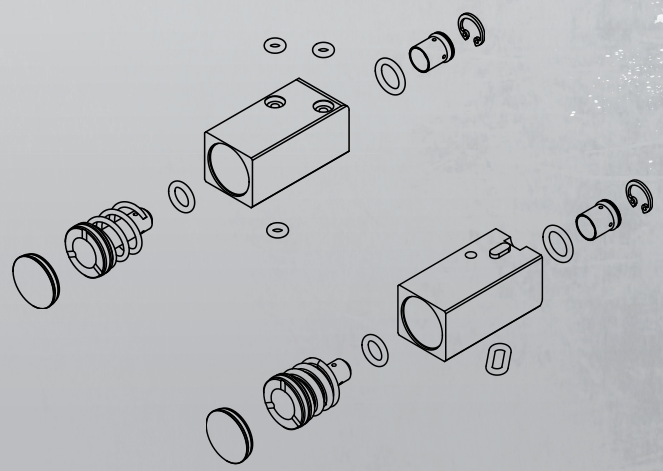

ADVANCED SERVICE/REPAIR OF THE IMPULSE50

The dual-regulators in the Impulse50 allow its valve to operate at a pressure that gives optimal efficiency while the piston is driven at a lower pressure for minimal kick. Both regulators are self contained and can be easily removed for inspection. With the Impulse50 unloaded and degassed, use an o-ring pick to remove the Impulse50 control panel's rubber cover.

Use a 1/8-inch allen wrench to remove the control panel screw. If the control panel plate does not rise up on its own, turn upper (velocity) adjuster screw clockwise until the low-pressure's spring pressure pushes out the control panel plate.

Lift out the control panel plate. Lift out the two regulator bodies, they can be separated once removed from the grip frame.

The regulators may be disassembled one at a time to avoid mixing parts. Tapping a back corner of the regulator body on a table will dislodge the piston and spring.

All regulator o-rings should be lightly lubricated with GI-LUBE during reassembly. The regulator seat may be removed with a pair of snap-ring pliers.

The small black screws in the primary (upper) regulator plug air passages created during manufacturing and should not be removed.

After inspection and cleaning re-stack the regulators, slide them back into the grip frame, and reinstall the control panel plate and rubber cover.

Always re-check and adjust velocity after making any regulator adjustments.

22 GRIP FRAME & SOLENOID

NOTE: Unload and degas the Impulse50 before performing any cleaning or maintenance work.

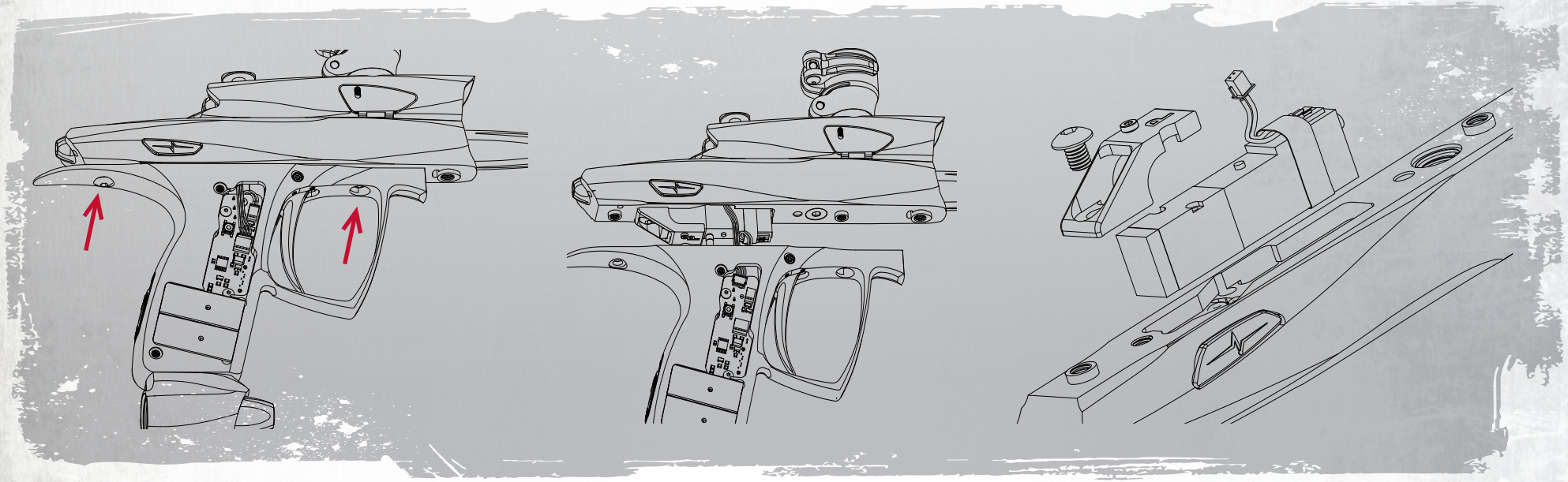

ADVANCED REPAIR OF THE IMPULSE50

Use a 5/64-inch allen wrench to remove the marker's rubber grip, then unplug both the anti-chop wiring harness and solenoid valve wires from the Impulse50 circuit board, as when removing the circuit board. Remove the foregrip.

Use a 1/8-inch allen wrench to remove the two grip frame screws. Gently separate the grip frame from the Impulse50 body.

Take care not to expose the gas transfer pipes in the grip frame to bending forces. The gas transfer pipes should be removed with a 3/32-inch allen wrench only if being replaced due to scratches or bending, in which case thread sealant is required.

If removing the solenoid valve, use a 1/8-inch allen wrench to remove the solenoid valve clamp screw and the solenoid valve clamp. The solenoid valve may then be lifted out of its pocket in the Impulse50 body. Note the position of the three solenoid valve o-rings in the body. To the left and right of these o-rings are the gas transfer ports, both of which have o-rings within their walls. Replacing these o-rings is a task best suited for an experienced technician.

Very lightly lubricate the outside of the gas transfer tubes before reassembly, then reinstall the solenoid valve and its clamp. When reassembling the grip frame to the body, first thread the solenoid valve and anti-chop wires into the grip frame. Take care to guide the anti-chop wires and make sure they are not pinched while fitting the grip frame back to the body. Only stock grip frame screws should be used, as incorrect screw length may cause solenoid valve damage.

Secure the grip frame in the body with the grip frame screws and re-attach the rubber grip, then reinstall the foregrip.

23 BODY SEPARATION

NOTE: Unload and degas the Impulse50 before performing any cleaning or maintenance work.

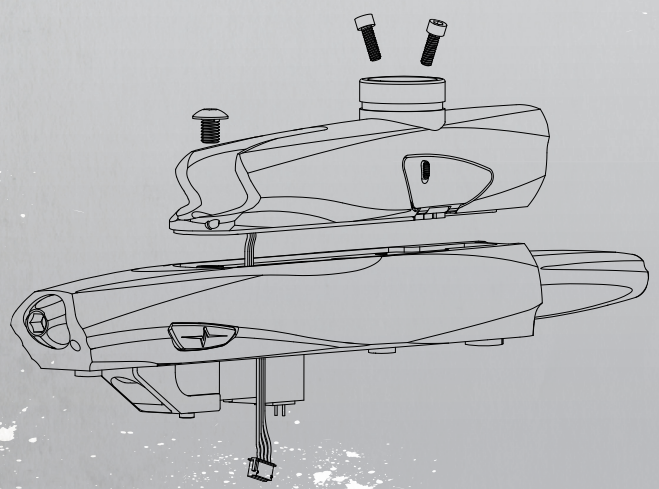

BODY O-RING PLACEMENT ON THE LOWER BODY

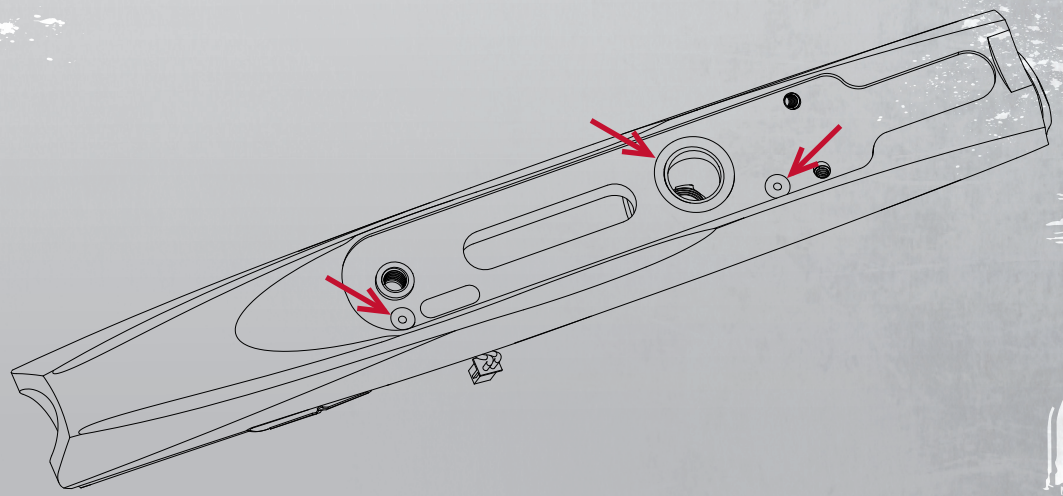

ADVANCED SERVICE/REPAIR OF THE IMPULSE50

Separate the body only when necessary, as internal anti-chop components may be damaged by unnecessary movement. Remove the Impulse50 bolt, and remove the body from the grip frame following the instructions in this manual.

Using a 1/8-inch allen wrench, remove the rear body joiner screw. Use a 1/8-inch allen wrench to loosen the clamp on the bottom of the feedneck and remove the feedneck from the upper body.

Using a 3-32-inch allen wrench, remove the two front body joiner screws from inside the breech. Due to the angled placement of these screws, the use of a ball-end allen wrench is advised. Carefully separate the two body halves, guiding the anti-chop wiring harness through the anti-chop slot in the lower body. Both the eye covers and the anti-chop wiring harness may be removed or replaced if necessary while the body halves are apart.

Inspect the three body joiner o-rings and be certain they are properly seated in the top surface of the lower body. If the anti-chop covers must be removed, they may be opened and lifted out while the body halves are separate. Notice that body halves contain small plug screws installed during the manufacturing process to block holes drilled to make internal gas passages. These screws should not be removed. Please, resist peer pressure and curiosity, and leave these screws alone.

When reassembling the Impulse50 body, make sure the anti-chop wires are properly seated in the upper receiver, then guide the anti-chop plug and wiring through the anti-chop slot in the lower body. Join the body halves, then secure them with the body joiner screws.

TROUBLESHOOTING & PROBLEMS

WARNING

Over-tightening or cross threading screws or fittings may result in permanent, non-repairable damage.

IMPULSE50 WILL NOT TURN ON:

- Make sure the battery is fully charged, and or change to a fully charged spare battery.
- Open the rubber grip, as when changing the battery, and inspect to make sure no debris is preventing the power button from pressing the power switch on the Impulse50 circuit board.

BREAKING PAINT:

- Paint to barrel match is wrong. The paint you are using has absorbed moisture and grown too large for the barrel you are shooting it through. Get a Freak 50 barrel insert system and select a matching insert or purchase fresh GI-MilSim 50 caliber paintballs.
- Ball Detents are damaged or missing. See manual section on cleaning field-stripping. Inspect and replace detents if damaged or missing.
- Paint is too low quality, improperly shipped, stored or too brittle. Switch to fresh GI-MilSim 50 caliber painbtballs.
- Turn on the anti-chop system.
- Check the Impulse50 battery. It may be low, causing incomplete cycling.
- Loader may not be keeping up. Check loader batteries or use a faster loader.

IMPULSE50 TURNS ON BUT WILL NOT FIRE:

- Make sure the battery is fully charged, and or change to a fully charged spare battery.
- Make sure the trigger adjustments allow the trigger to activate the trigger switch when pulled, and reset when released.
- Make sure the bolt pin is correctly seated in the firing piston.
- Clean the bolt and breech.
- Reset the dwell setting to 8ms.
- Increase the second-stage regulator pressure.

AIR LEAKS DOWN THE BARREL WHEN GASSING UP THE IMPULSE50:

- The rear face of the firing valve core is dirty or damaged. See the cleaning section of this manual, clean and inspect the firing valve core, replace if damaged.

IMPULSE50: FIRES, BUT VELOCITY DROPS UNDER RAPID FIRE:

- Make sure the Impulse50 battery is fully charged.
- Increase the secondary regulator pressure.
- If problem persists, clean and inspect regulators.

TROUBLESHOOTING & PROBLEMS

REGULATOR LEAK OR CLIMB IN PRESSURE:

- Clean both regulators, inspect, and if necessary replace their piston seats.

LEAK IN THE GRIP FRAME, NEAR THE REGULATORS:

- Clean and inspect both regulators.
- Inspect and replace any o-rings that show signs of damage.

LEAK BETWEEN GRIP FRAME AND BODY:

- While the Impulse50 is pressurized, decrease the pressure in the primary regulator (turn clockwise) until the regulator is off. If the leak stops, inspect the right side air transfer linkage, and the lower body o-ring into which it fits – replace if damaged.
- If leak continues, inspect and if damaged replace the firing piston o-ring.
- If leak continues, inspect and if damaged replace the solenoid valve o-rings.

LEAK BETWEEN BODY HALVES:

- Inspect, and if damaged, replace the body o-rings

LEAK FROM FRONT OF MARKER

- Inspect, lubricate, and if damaged, replace the front o-ring on the firing valve core.

THE IMPULSE50 HAS FIRST SHOT DROP OFF (FSDO)

- Clean, lubricate and inspect the bolt, firing piston and firing valve core.
- Increase the second-stage regulator pressure.
- Increase the FSDO setting value.

TRIGGER IS STUCK AND WILL NOT MOVE FREELY:

- Make sure the trigger mount screws have not been overtightened. Loosen them slightly.
- Remove the grip frame and remove the trigger. Clean any debris that may be impeding trigger movement.

PARTS DIAGRAMS

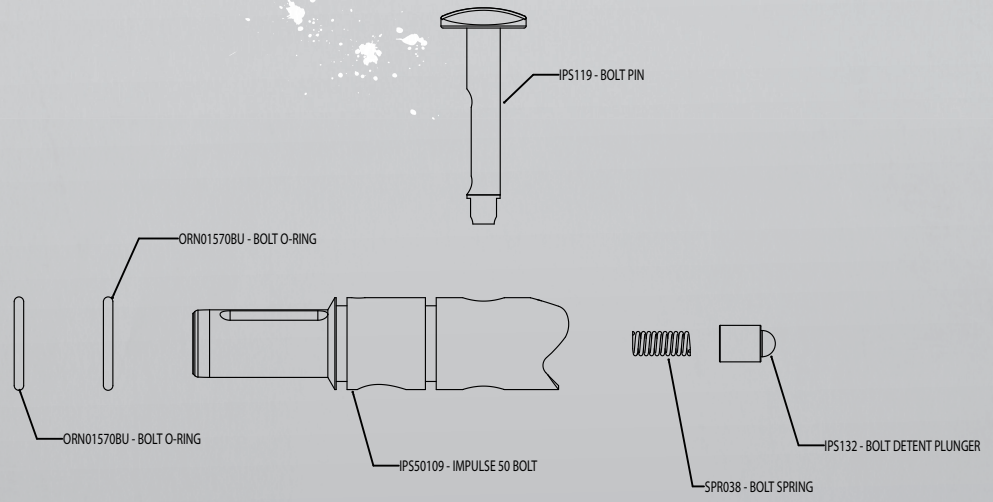

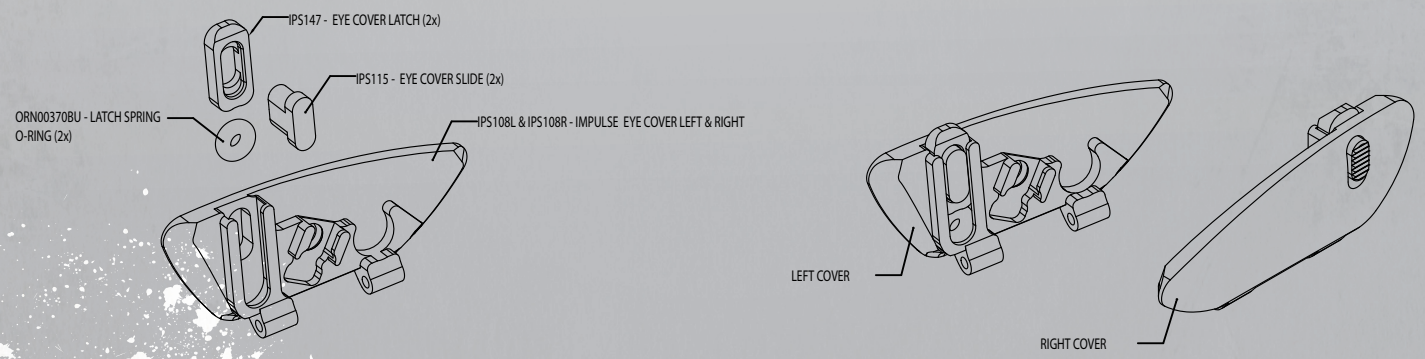

IMPULSE50 EYE COVER ASSEMBLY

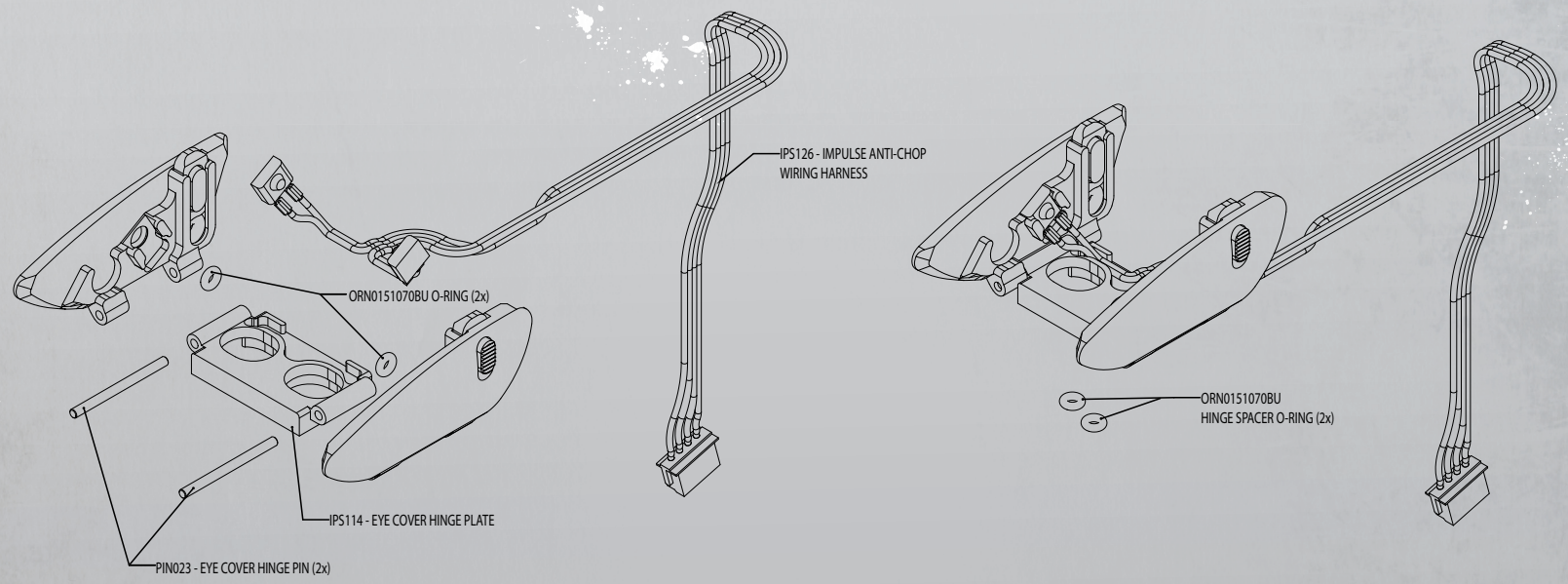

IMPULSE50 CLAMPING FEEDNECK

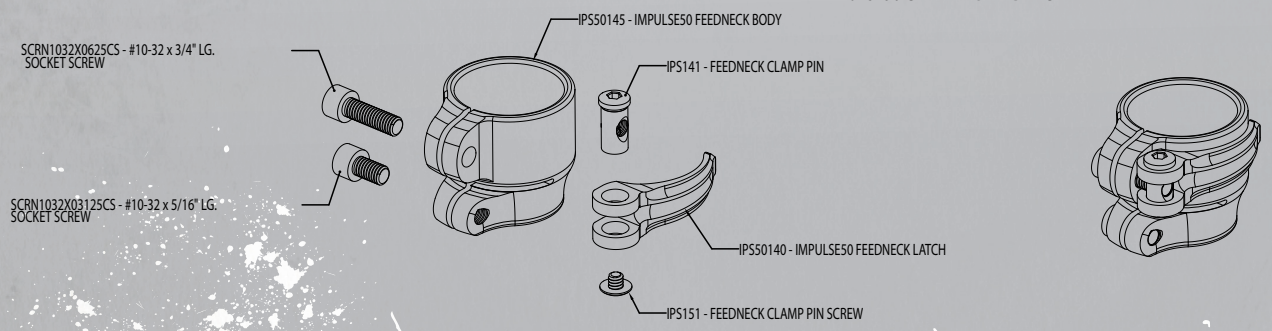

PARTS DIAGRAMS

VALVE HOUSING

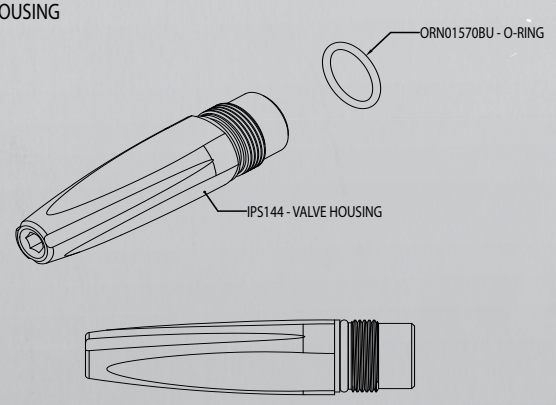

FIRING VALVE CORE

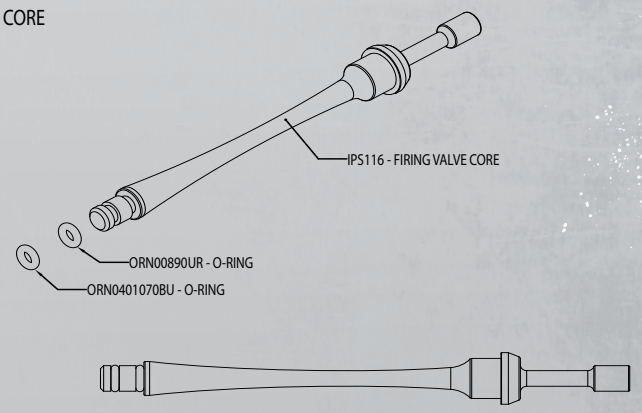

FIRING VALVE SEAT

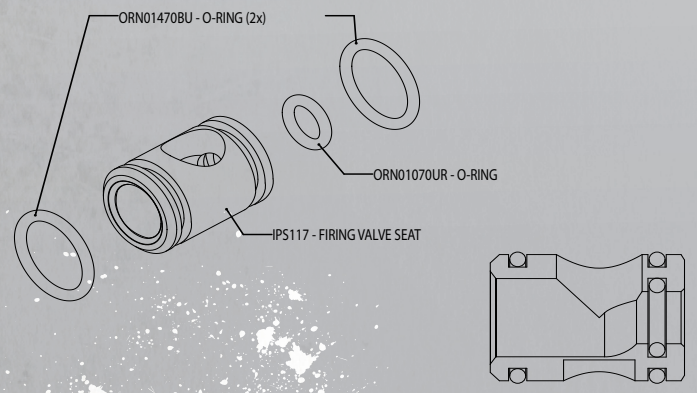

FIRING VALVE LOCKING SCREW

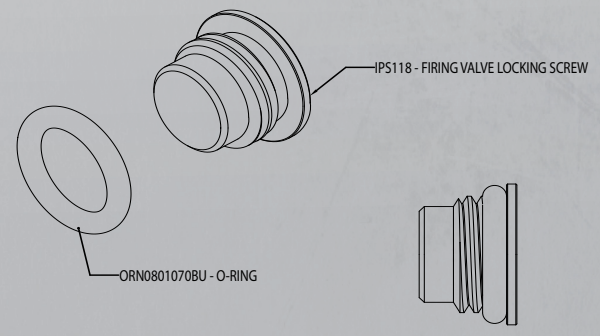

PARTS DIAGRAMS

FIRING PISTON ASSEMBLY

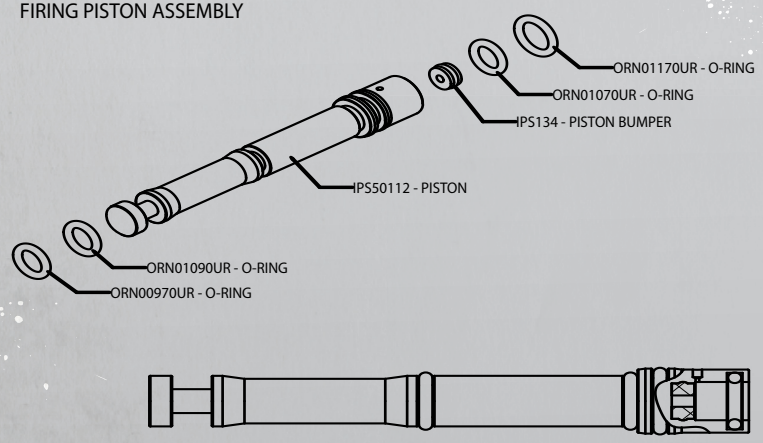

END CAP ASSEMBLY

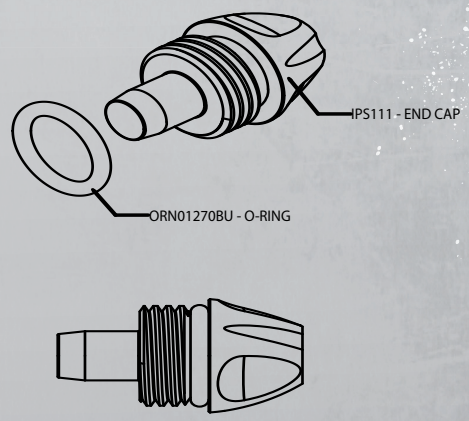

IPS143ASM EXHAUST RESTRICTOR INSERT ASSEMBLY

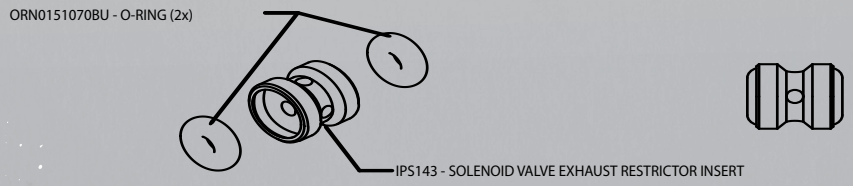

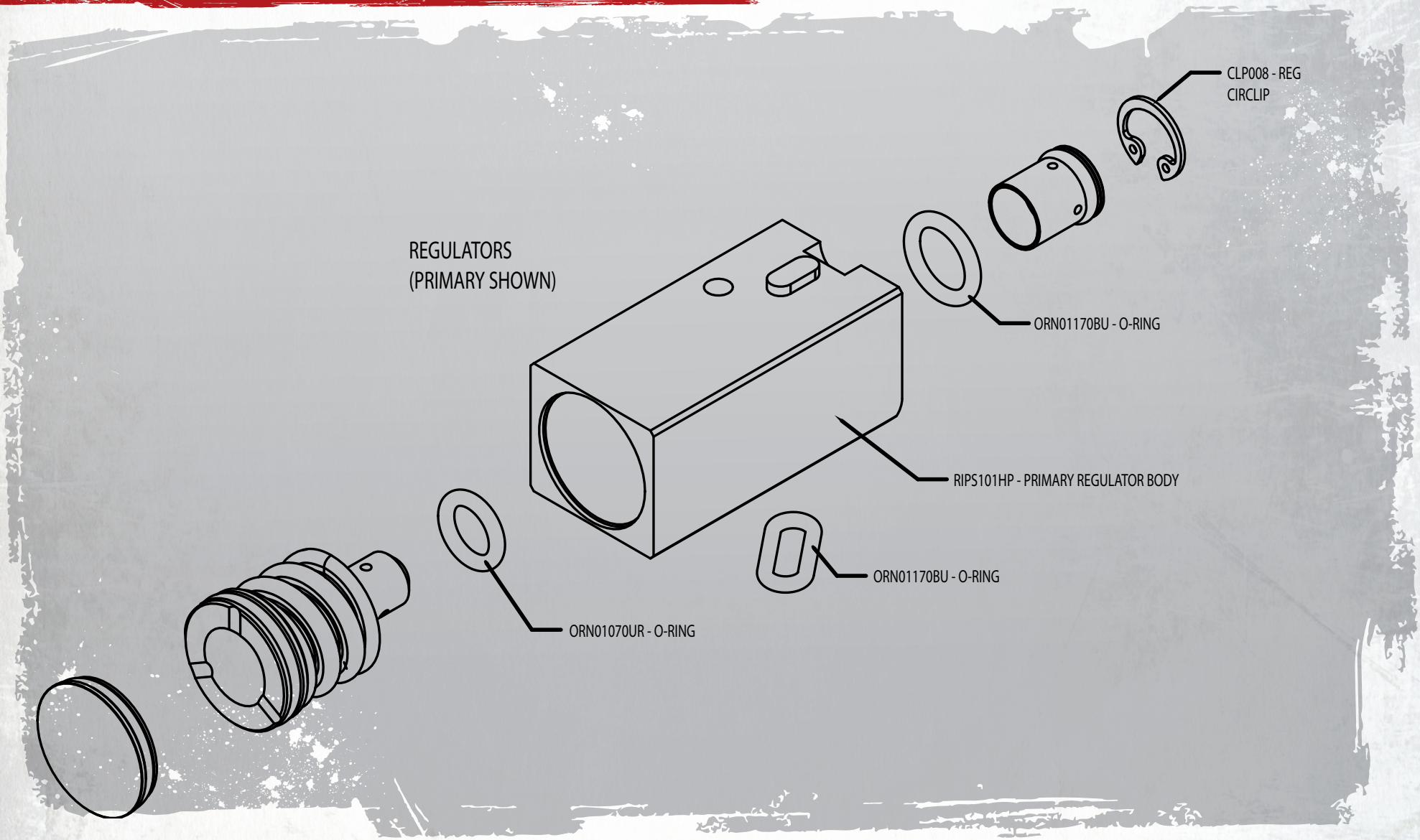
REGULATORS
(PRIMARY SHOWN)
CLP008 - REG
CIRCLIP
ORN01170BU - O-RING
RIPS101HP - PRIMARY REGULATOR BODY
ORN01170BU - O-RING
ORN01070UR - O-RING

PRIMARY REGULATOR PISTON ASSEMBLY

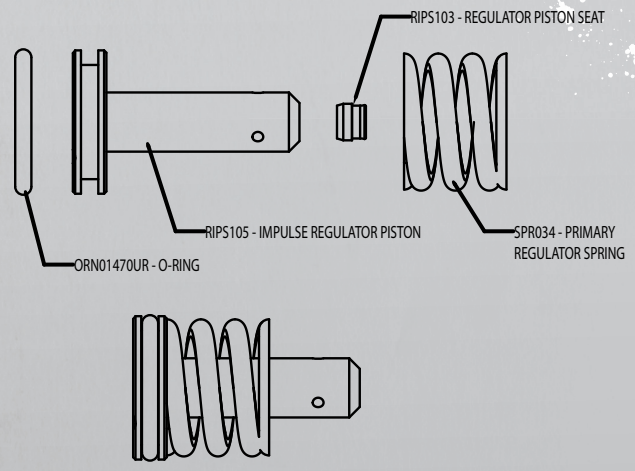

SECOND STAGE REGULATOR PISTON ASSEMBLY

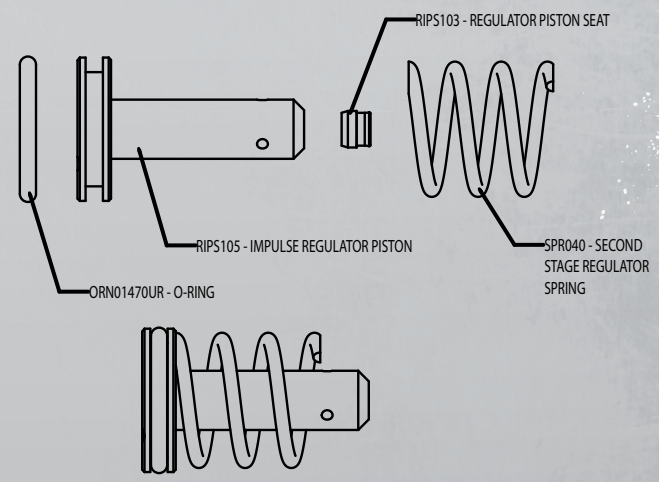

REGULATOR END CAP ASSEMBLY (2x)

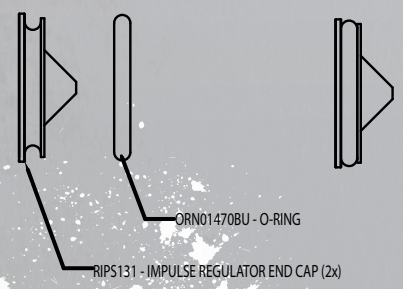

REGULATOR ADJUSTMENT SLEEVE ASSEMBLY (2x)

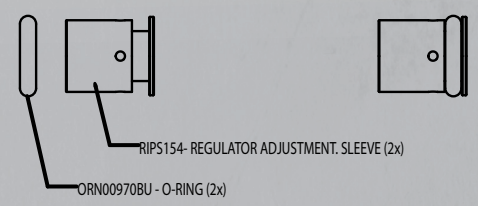

PARTS DIAGRAMS

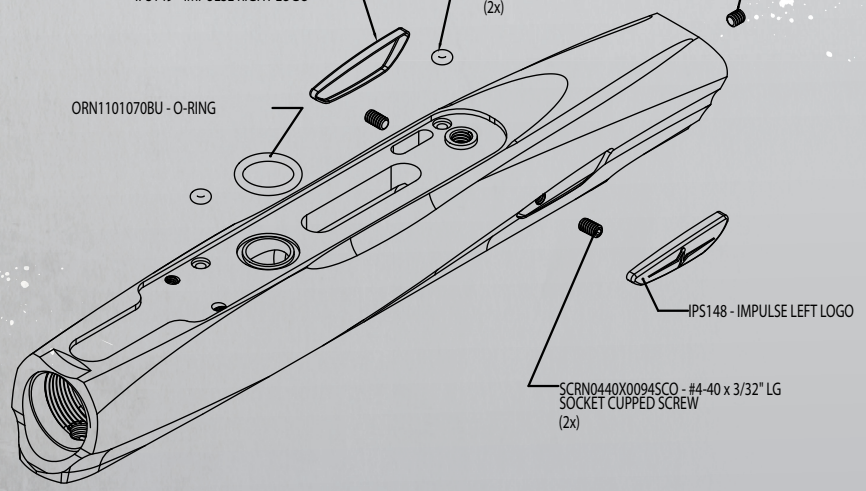

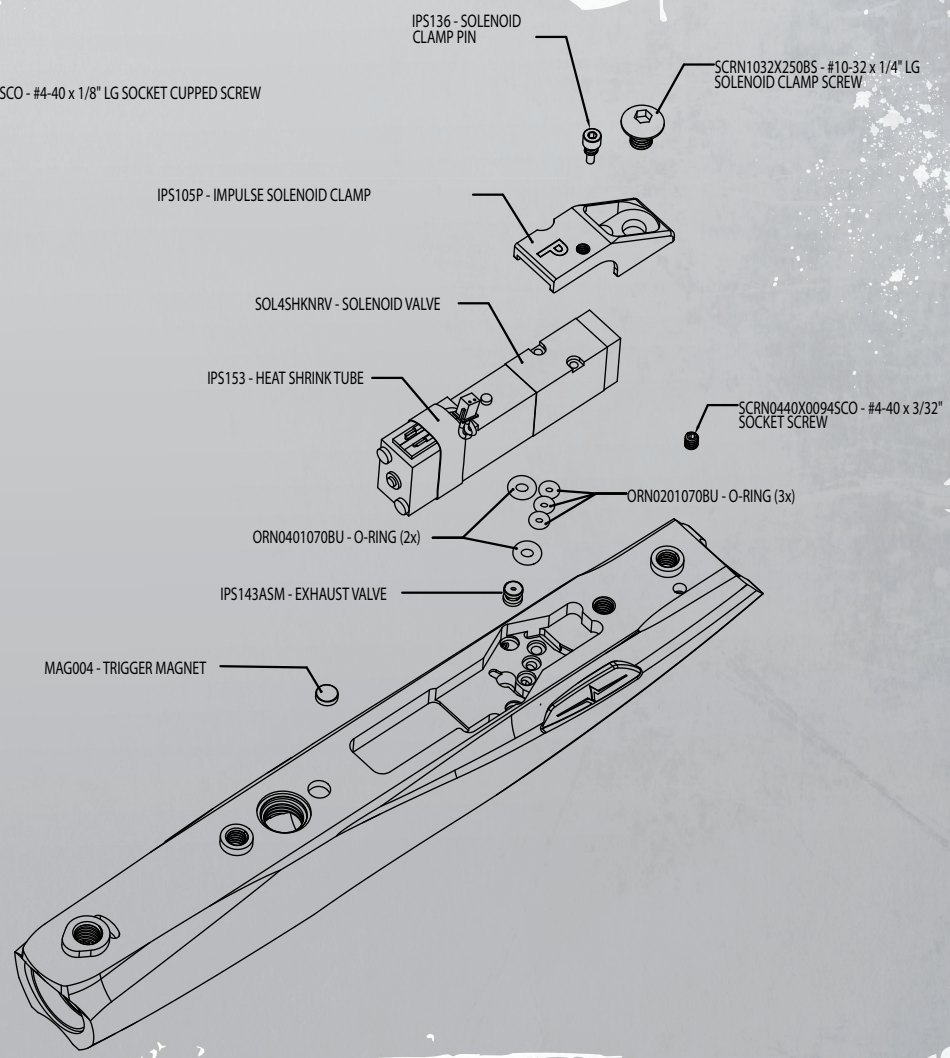

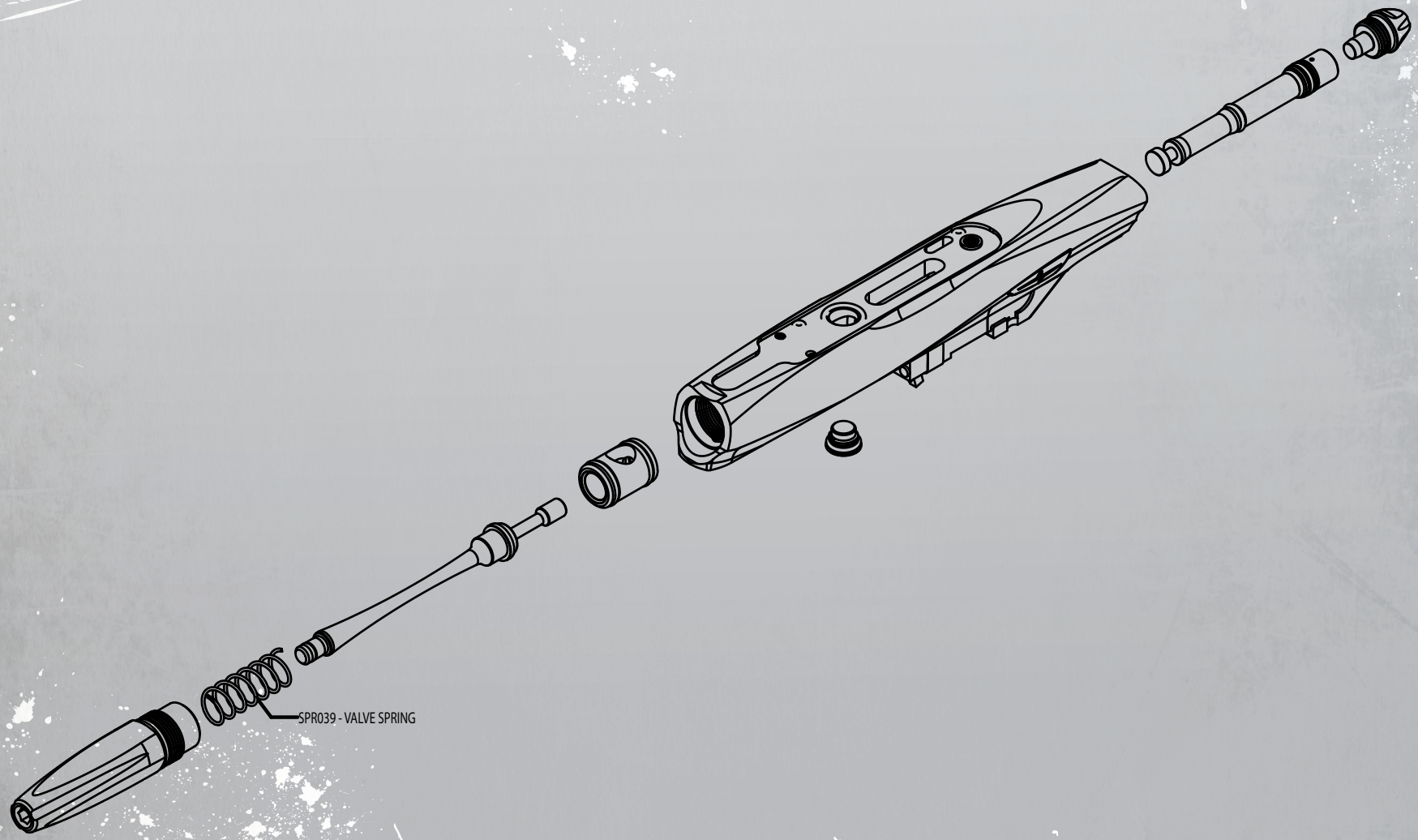
SPR039 - VALVE SPRING

PARTS DIAGRAMS

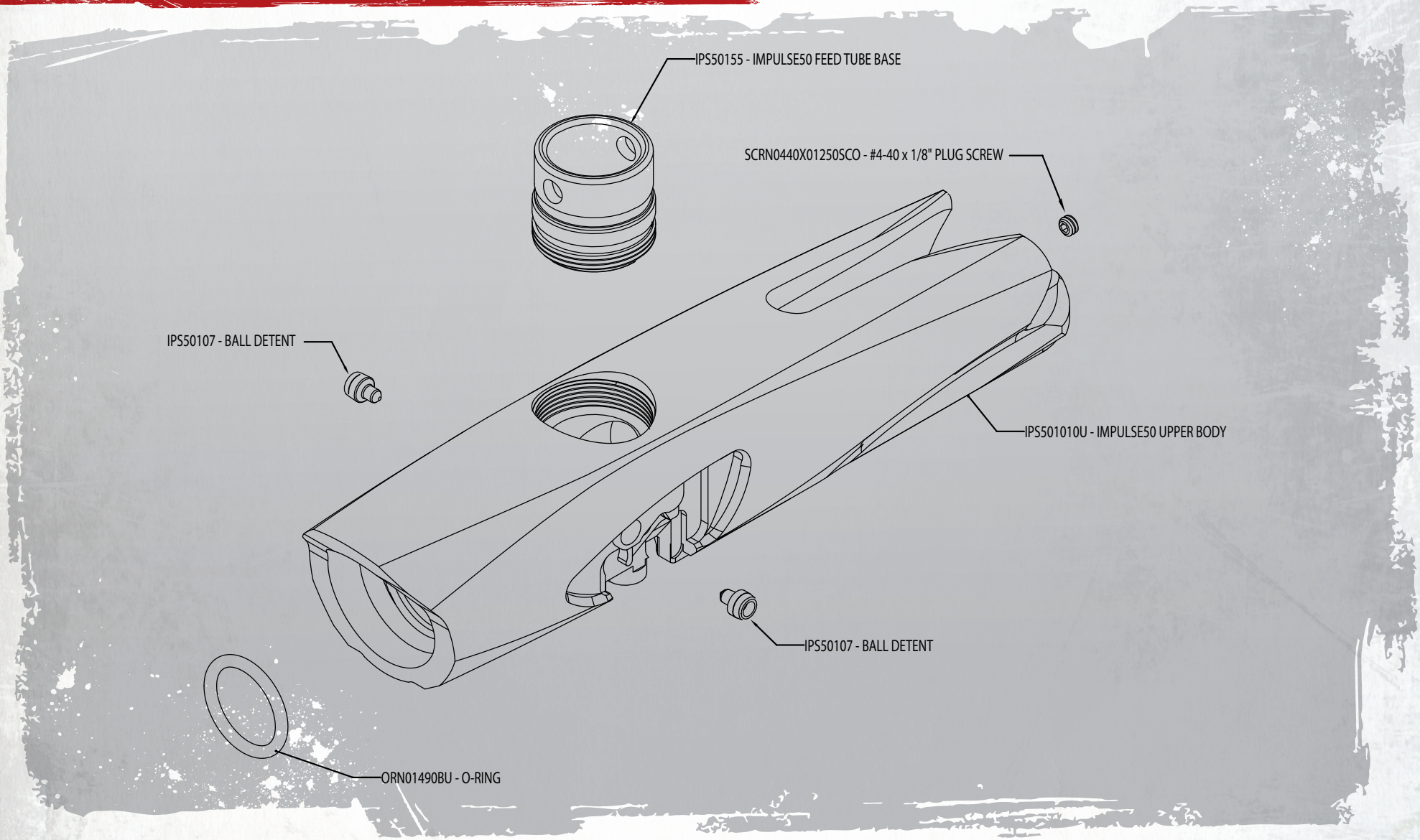

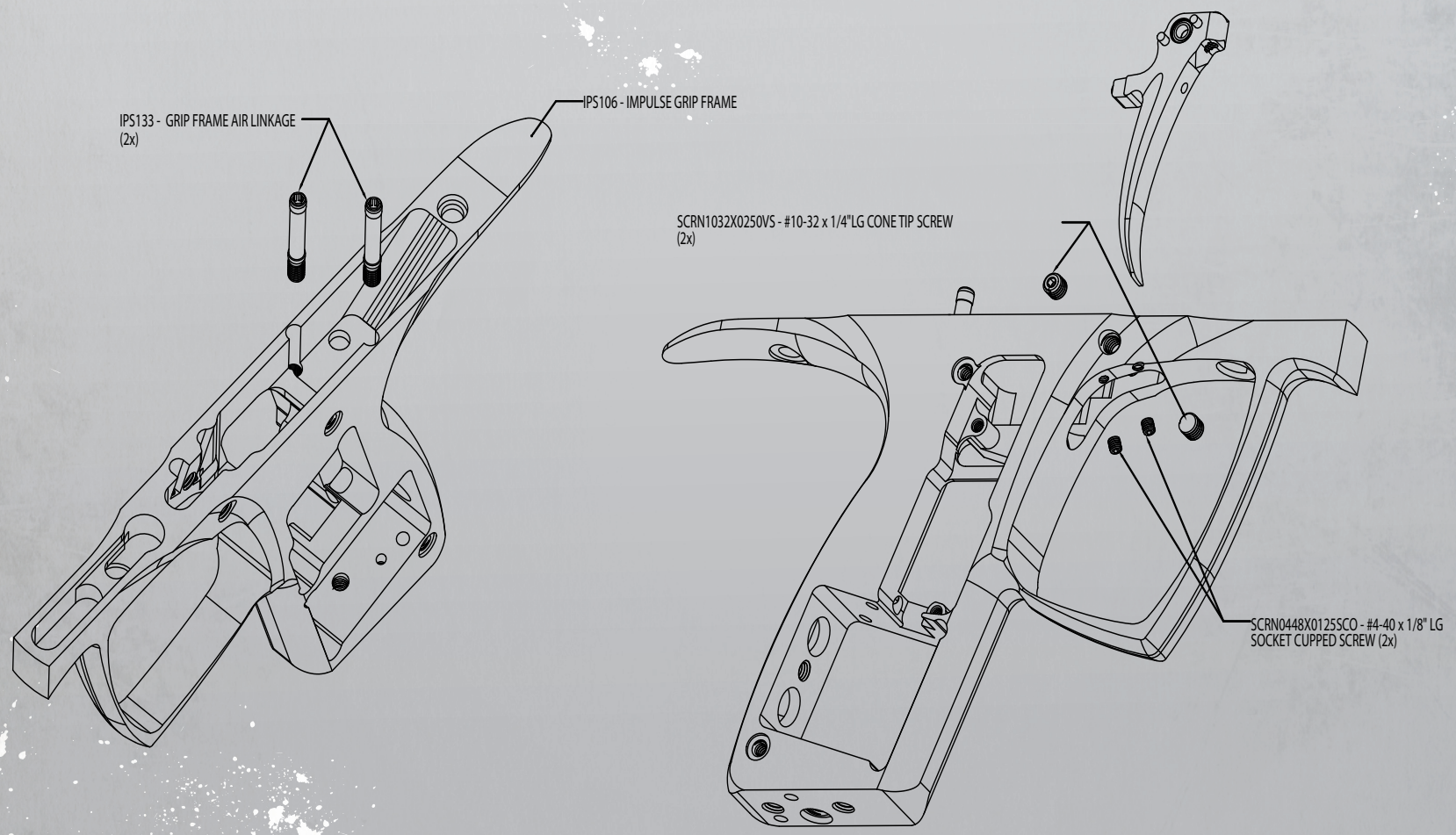
IPS133 - GRIP FRAME AIR LINKAGE (2x)
IPS106 - IMPULSE GRIP FRAME
SCRN1032X0250VS - #10-32 x 1/4"LG CONE TIP SCREW (2x)
SCRN0448X0125SCO - #4-40 x 1/8" LG SOCKET CUPPED SCREW (2x)

PARTS DIAGRAMS

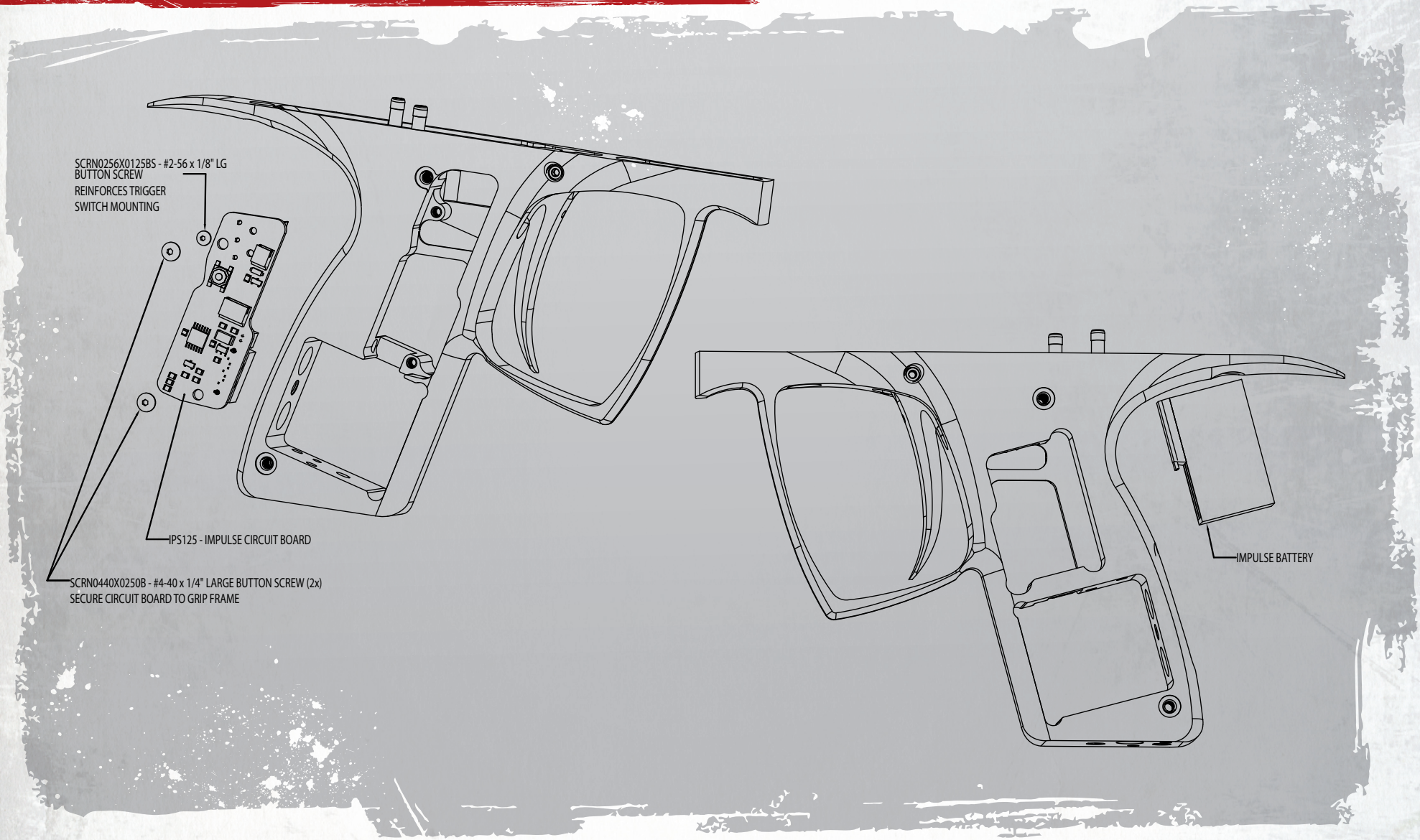

PARTS DIAGRAMS

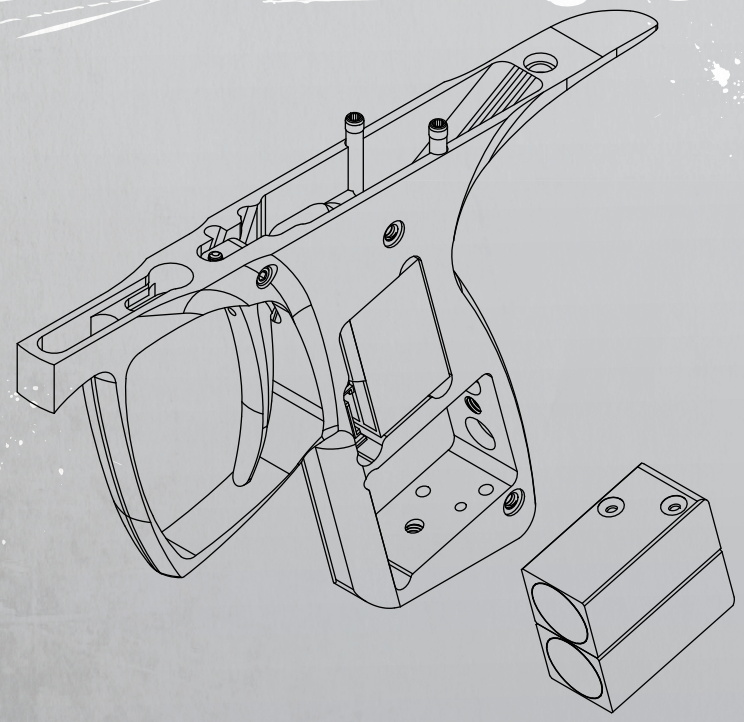

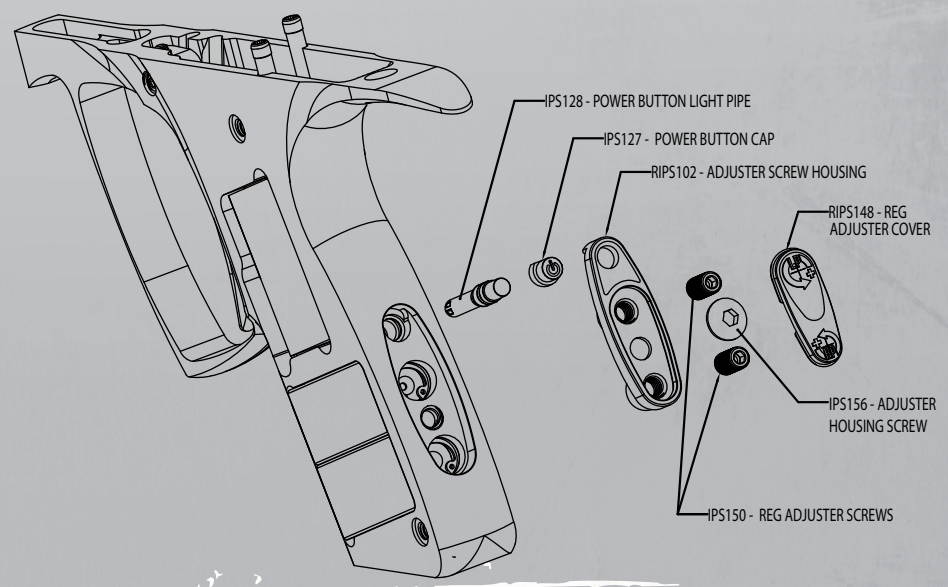

PARTS DIAGRAMS

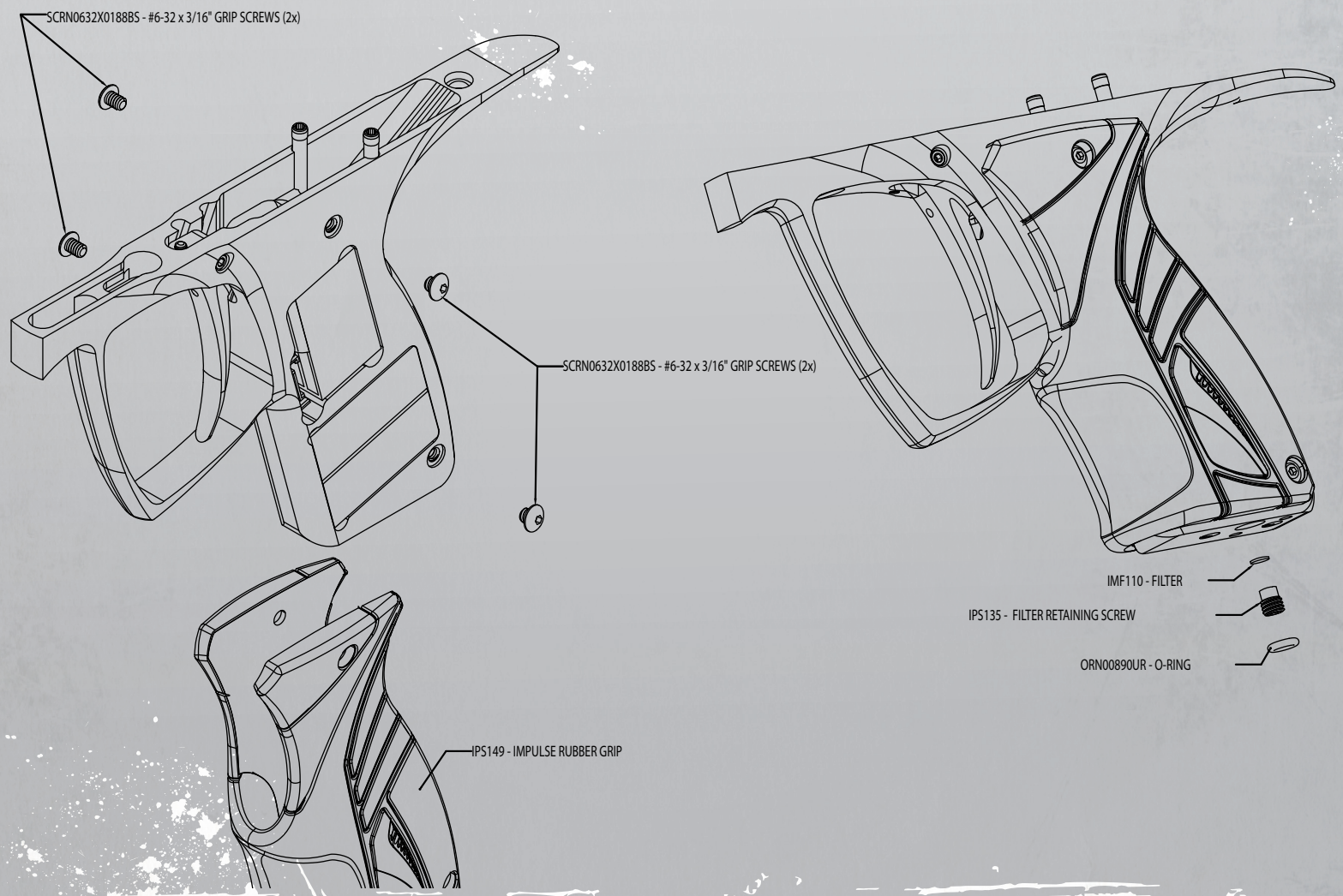

TECHNICAL SUPPORT & WARRANTY

WARRANTY

G.I. Milsim warrants for one (1) year to initial retail purchaser that the paintball marker and regulator are free from defects in materials and workmanship. Disposable parts (batteries, o-rings, seals, springs, etc.) are not warranted. The valve assembly is warranted for six (6) months. The solenoid and electronics on the marker are warranted for six (6) months, plus an additional warranty of six months for electronic parts only (installation and labor are not included). This warranty does not cover surface damages (scratches and nicks), misuse, improper disassembly and re-assembly, attempts made to drill holes or remove metal or polymer from any surfaces which could degrade performance and reduce pressure safety factors of the marker. Do not make changes to the marker without written approval. The only authorized lubricant for the marker is GI-LUBE from G.I. Milsim. Use of any other lubricant could result in voiding your warranty. Paintball markers are non-refundable. This warranty is limited to repair or replacement of defective parts with the customer to pay shipping costs. This warranty is effective only if the customer returns the warranty registration card enclosed with the marker. The warranty is non-transferrable. Do not attempt to alter the trigger assembly in any way, as this will void your G.I. Milsim warranty. Trigger alteration of any kind may result in serious injury. Replacement or alteration of regulator(s) will void warranty and may result in serious damage and or injury.

To obtain warranty support, your marker must be registered with G.I. Milsim. You may register electronically at **www.GIMilSim.com/warranty**. If you have questions or require assistance with warranty registration, e-mail G.I. Milsim at **warranty@GIMilSim.com**.

TECHNICAL AND WARRANTY SUPPORT

Technical and warranty support for your G.I. Milsim marker may be obtained through your local dealer or through GI-MilSim. In all cases, **markers will not be accepted for repair unless a Return Materials Authorization number (RMA) is obtained prior to shipment** via **www.GIMilSim.com/service** or by sending an e-mail to **service@GIMilSim.com**. Additional support and downloadable product manuals are available through GIMilSim.com.

G.I. MilSim Canadian Marketing Headquarters
1375 32e Avenue
Lachine (Montreal), Quebec.
H8T 3H2, Canada
Telephone: 514.631.5559
Fax: 514.636.9894

World Wide Web: **www.GIMilSim.com**
General E-Mail: **info@gimilsim.com**
Warranty Registration E-Mail: **warranty@gimilsim.com**
Warranty/Repair E-Mail: **service@gimilsim.com**